ST. CHARLES COUNTY PROJ. NO.:	SHEET NUMBER	TOTAL SHEETS
O'FALLON ROAD	95	114
FEDERAL PROJECT NO. STP-5640(606)		

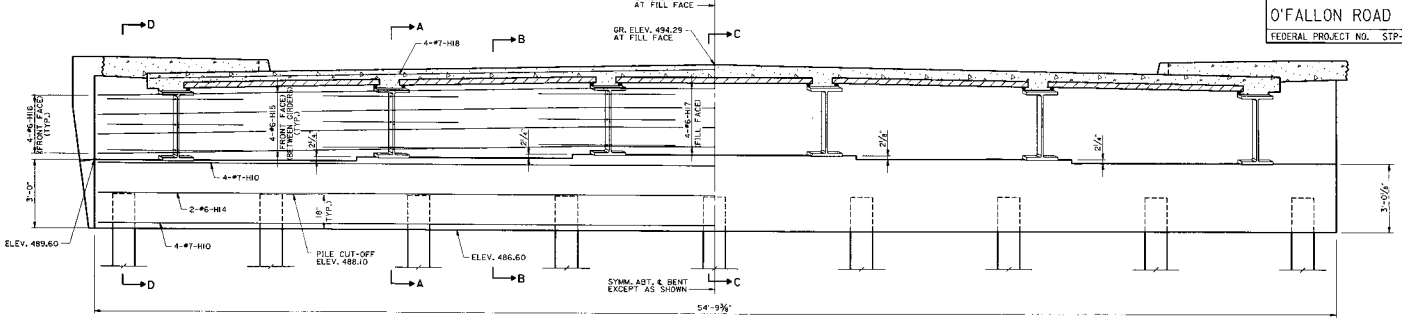

SECTION NEAR END BENT

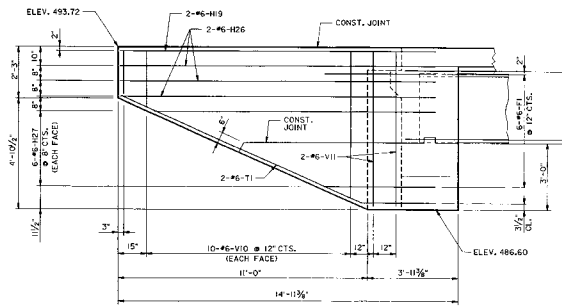

ELEVATION E-E

SECTION THRU WING

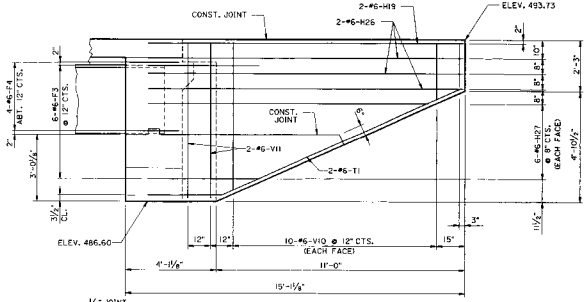

ELEVATION H-H

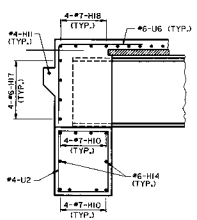

SECTION A-A

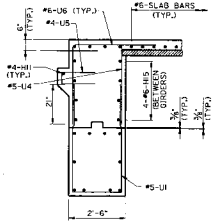

SECTION B-B

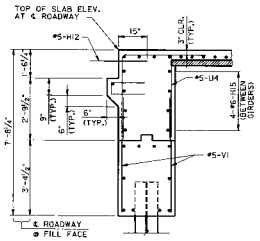

SECTION C-C

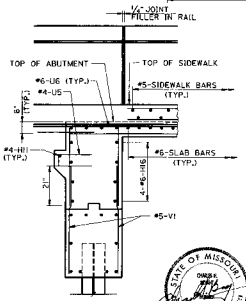

SECTION D-D

DETAILS OF END BENT NO. 2

SUBSTRUCTURE QUANTITY TABLE FOR END BENT NO. 2		
ITEM		QUANTITY
CLASS I EXCAVATION	CU. YD.	65
STRUCTURAL STEEL PILES (12")	LIN. FT.	207
CLASS B CONCRETE (SUBSTR.)	CU. YD.	20

ALL CONCRETE IN THE END BENT ABOVE TOP OF BEAM AND BELOW TOP OF SLAB SHALL BE CLASS B-2.

FOR LOCATION OF ELEVATIONS E-E AND H-H, SEE SHEET NO. 94.

FOR REINFORCEMENT OF THE SAFETY BARRIER CURB SEE SHEET NOS. 100 & 101.

BEND F1 BARS IN FIELD TO CLEAR GIRDERS.

ALL VERTICAL REINFORCING BARS IN THE SUPERSTRUCTURE BEAMS OR CAPS SHALL BE FIELD ADJUSTED TO CLEAR PILES BY AT LEAST 1½".

WHEN POURING WINGWALLS, PROVISIONS SHALL BE MADE FOR SETTING REINFORCING STEEL FOR THE BARRIER RAIL.

STATE OF MISSOURI
OWEN E. LEND
E-24012
REGISTERED PROFESSIONAL ENGINEER
08 Dec 05

END BENT 2 DETAILS 2 OF 2

PLAN | DATE | BY | DESIGNED | DRAWN - AUTOMATED DESIGN | CHECKED | REVISED | NOTE NUMBER

PROFILE | DATE | BY | DESIGNED | DRAWN - CHECKED | CHECKED | REVISED | NOTE NUMBER

PLOT DATA | MODEL 2D | MODEL SCALE 1:1 | PLOT SCALE 1:1