CONSTRUCTION DETAILS

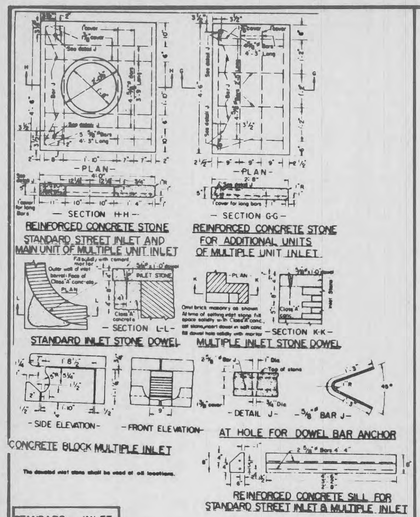

STANDARD - INLET STONES, BLOCKS & DESIGN DETAILS

DETAIL 37

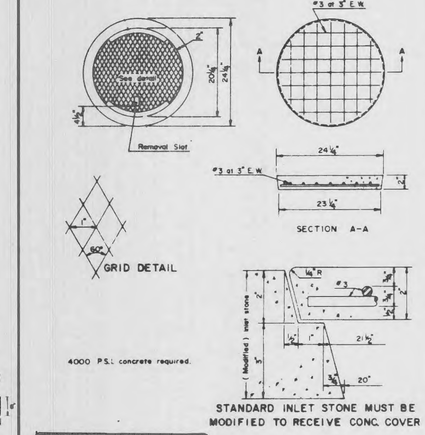

PRE-CAST CONCRETE INLET COVER

DETAIL 38

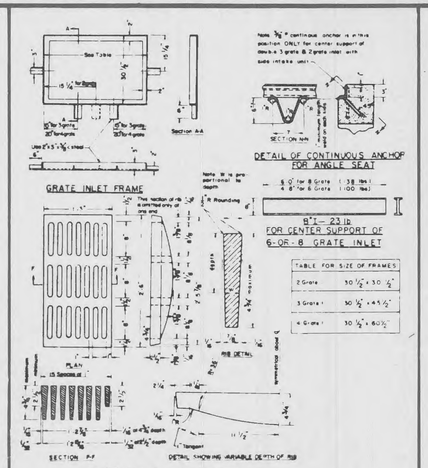

DETAILS OF INLET FRAME AND GRATES

DETAIL 39

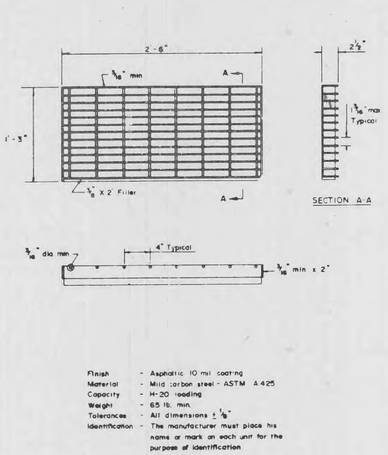

DETAIL OF STEEL GRATE (ALTERNATE TO CAST IRON "C" GRATE)

DETAIL 40

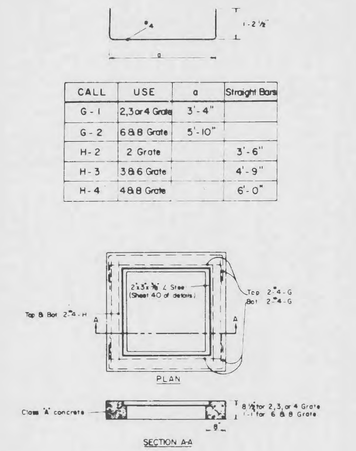

CALL	USE	a	Straight Bars
G-1	2,3 or 4 Grate	3'-4"	
G-2	6 & 8 Grate	5'-10"	
H-2	2 Grate		3'-6"
H-3	3 & 6 Grate		4'-9"
H-4	4 & 8 Grate		6'-0"

STEEL REQUIREMENTS FOR GRATE INLET SEAT

DETAIL 41

CAST IRON SIDE INTAKE UNIT FOR GRATED INLETS 249 LBS.

DETAIL 42

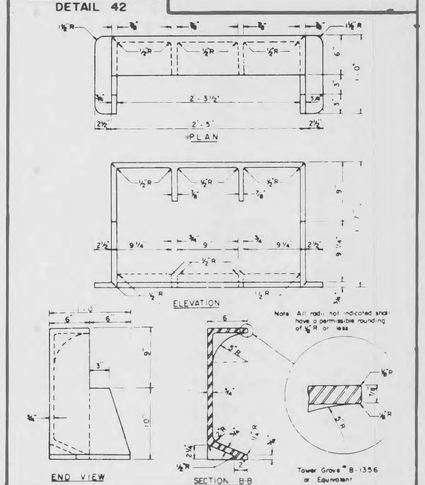

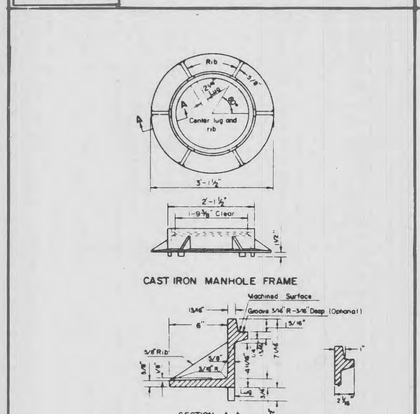

CAST IRON MANHOLE FRAME

DETAIL 43

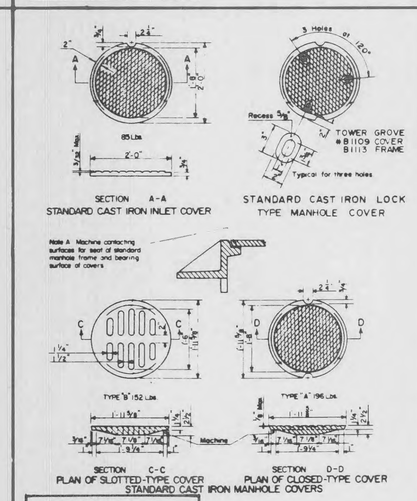

CAST IRON COVERS MANHOLES AND INLETS

DETAIL 44

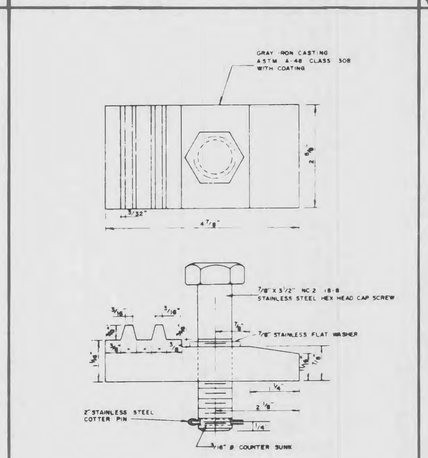

LOCK BLOCK FOR STANDARD CAST IRON LOCK TYPE MANHOLE COVER

DETAIL 45

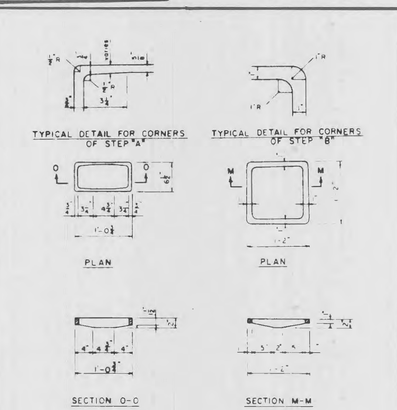

CAST IRON STEPS

DETAIL 46

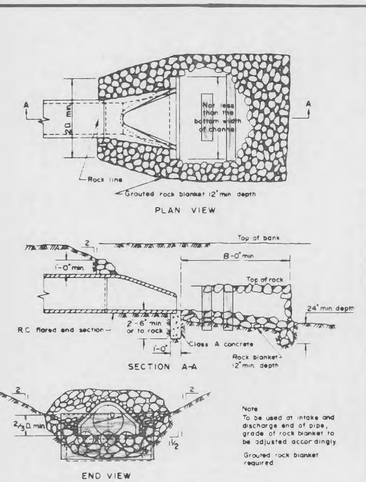

FLARED END SECTION & ENERGY DISSIPATOR

DETAIL 47

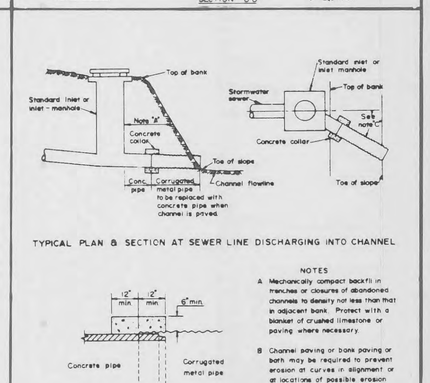

STORMWATER CHANNELS

DETAIL 48

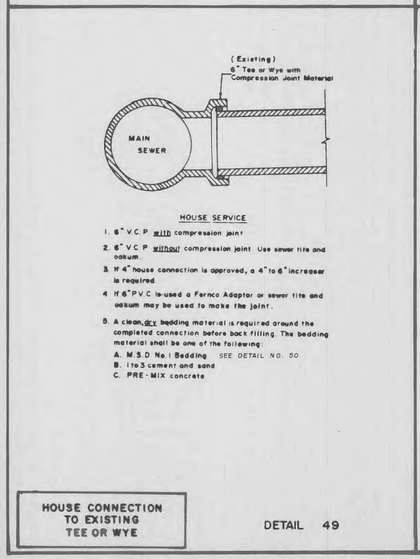

HOUSE CONNECTION TO EXISTING TEE OR WYE

DETAIL 49

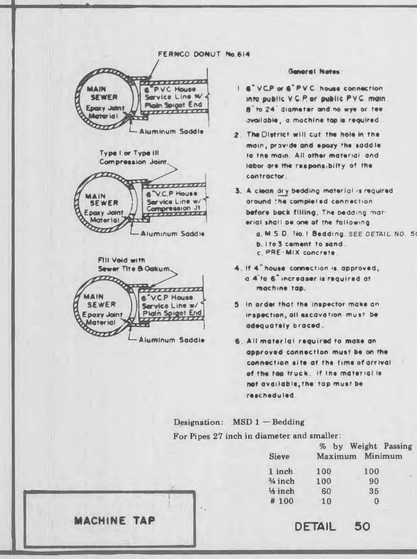

MACHINE TAP

DETAIL 50

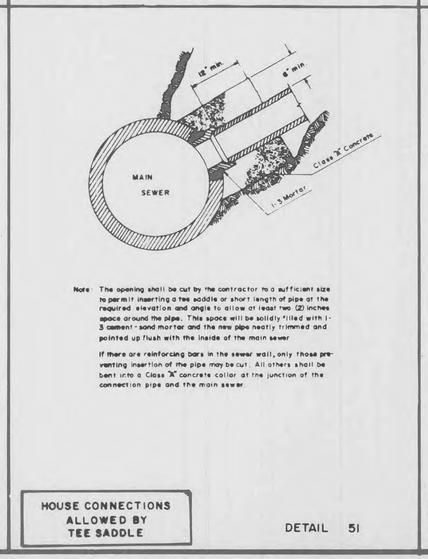

HOUSE CONNECTIONS ALLOWED BY TEE SADDLE

DETAIL 51

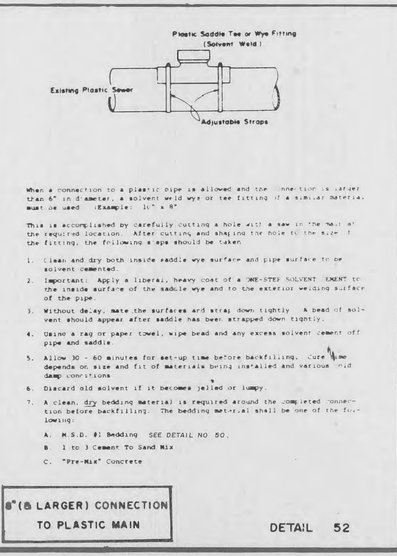

8" (& LARGER) CONNECTION TO PLASTIC MAIN

DETAIL 52

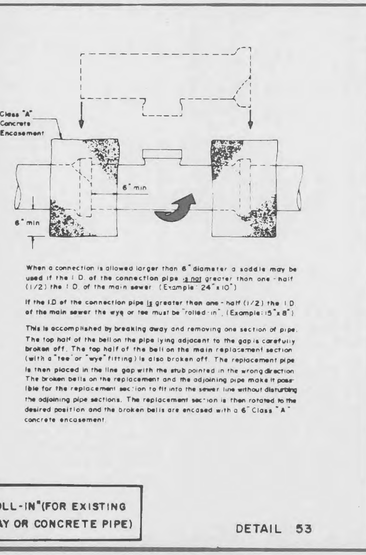

"ROLL-IN" (FOR EXISTING CLAY OR CONCRETE PIPE)

DETAIL 53

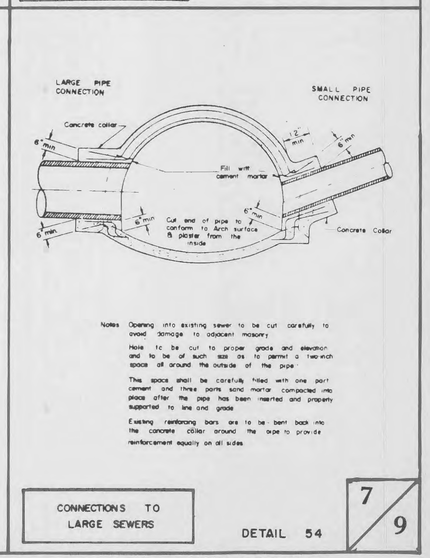

CONNECTIONS TO LARGE SEWERS

DETAIL 54