NOTES:
1. ALL HYDRANTS SHALL STAND PLUMB AND SHALL HAVE THE PUMPER NOZZLE FACING THE STREET OR ACCESS DRIVE.
2. A MINIMUM FIRE FLOW FROM A SINGLE HYDRANT SHALL BE FIFTEEN HUNDRED (1500) GALLONS PER MINUTE AT TWENTY (20) PSI RESIDUAL PRESSURE.
3. EACH FIRE HYDRANT SHALL HAVE NOT LESS THAN TWO 2-1/2 INCH OUTLETS AND ONE 4-1/2 INCH OUTLET, A 5-1/4 INCH VALVE, A 6 INCH BARREL AND SHALL BE OF THE BREAKAWAY DESIGN, FROST FREE WITH CHAIN, LEFT HAND OPEN DESIGN AND HAVE NATIONAL STANDARD THREADS.
4. THERE SHALL BE NO OBSTRUCTION, I.E., PLANTINGS, BUSHES, TREES, SIGNS, LIGHT STANDARDS, MAILBOXES, ETC. WITHIN SIX (6) FEET OF ANY FIRE HYDRANT.
5. APPROVED HYDRANTS ARE: AMERICAN FLOW CONTROL. AMERICAN DARLING B-84-B AND MUELLER HYDRANT. CENTURIAN-200
6. FIRE HYDRANTS SHALL BE COMPLETELY PAINTED RED (PORTER 4119 OR EQUAL)

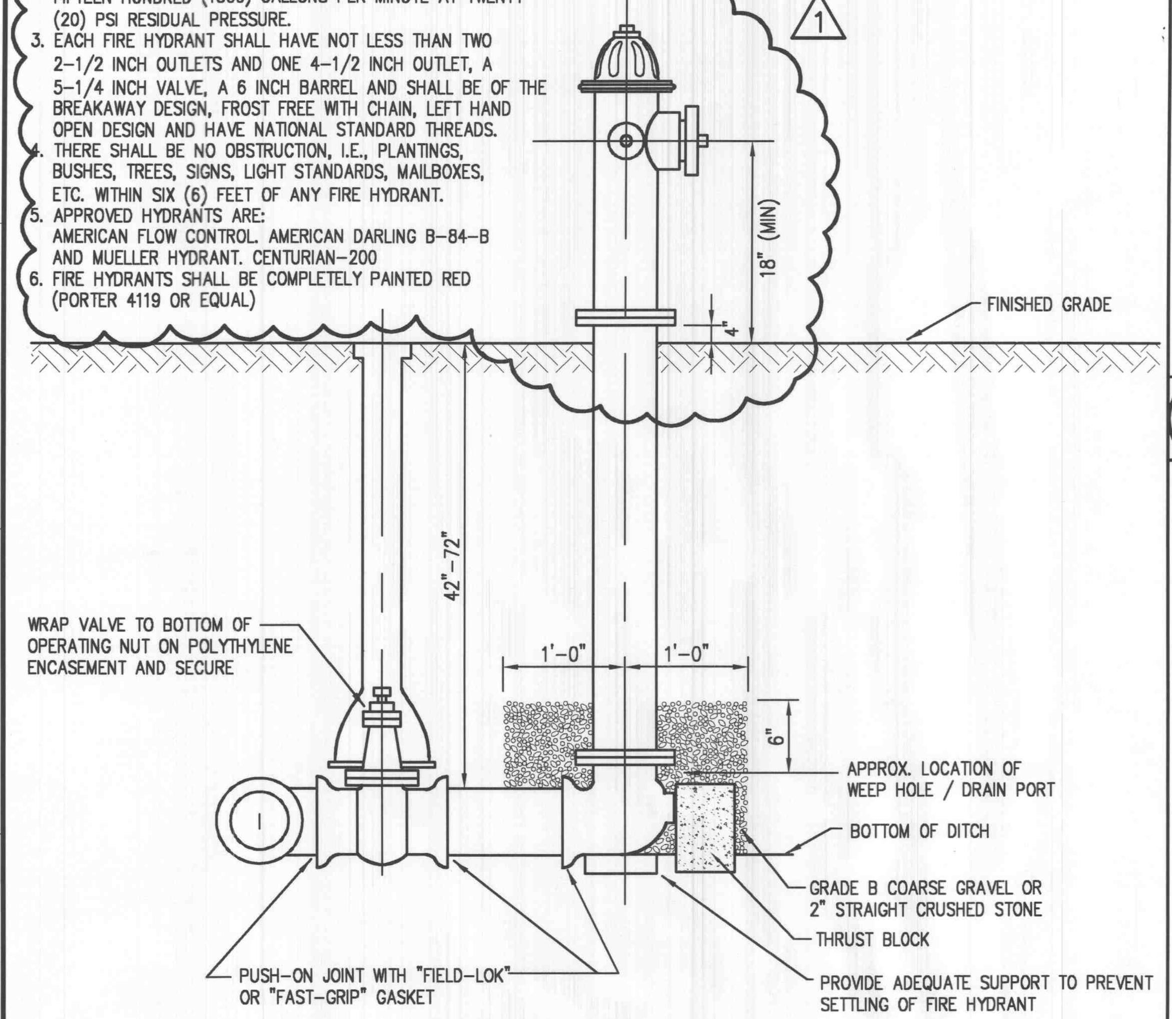

SECTION A-A

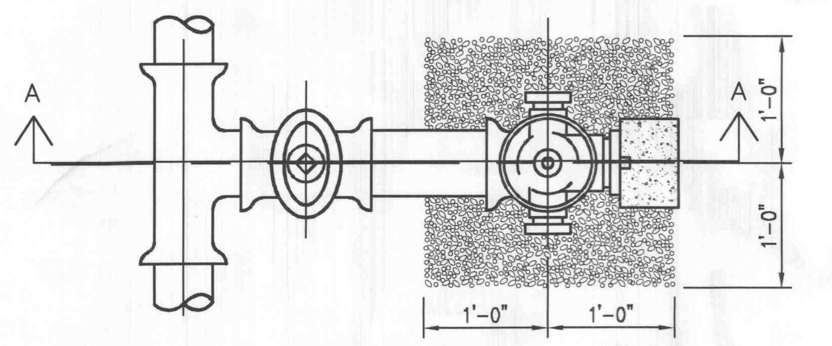

PLAN

1 Fire Hydrant Detail (Standard)

Scale: Not To Scale

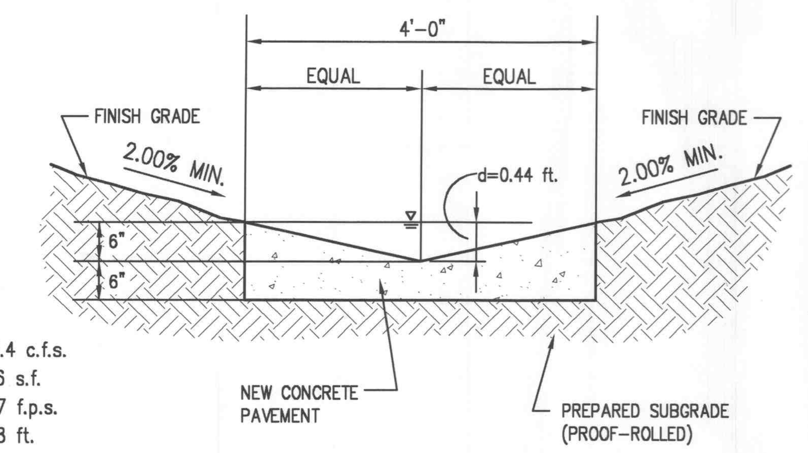

Q_{15} = 10.4 c.f.s.
A = 1.86 s.f.
V = 5.47 f.p.s.
d = 0.68 ft.

2 Concrete Swale (in Detention Basin) Detail

Scale: Not To Scale

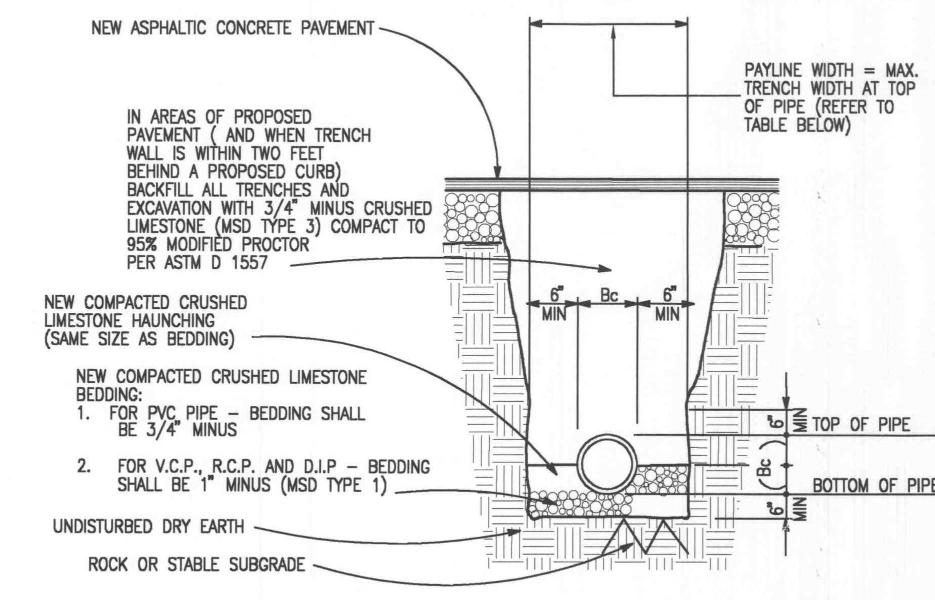

1. TRENCHES BEHIND CURBS SHALL BE BACKFILLED WITH ROCK TO WITHIN 12" OF SURFACE. REMAINING TRENCH SHALL BE FILLED W/6" CLEAN TOPSOIL ON 6" CLEAN EARTH BACKFILL.
2. BACKFILL IN TRENCHES WHICH ARE NOT IN AREAS OF (OR NOT WITHIN TWO FEET OF) PAVING SHALL CONSIST OF SELECTED JOB-EXCAVATED EARTH THOROUGHLY COMPACTED BY WATER JETTING OR WITH SUITABLE MECHANICAL TAMPERS.

INSIDE DIAMETER OF PIP (INCHES)	PAYLINE WIDTH OF TRENCH (INCHES)	INSIDE DIAMETER OF PIPE (INCHES)	PAYLINE WIDTH OF TRENCH (INCHES)
2,4,6,8,12	30		
15	36		
18	36		

3 Typical Trench Section Detail

Scale: Not To Scale

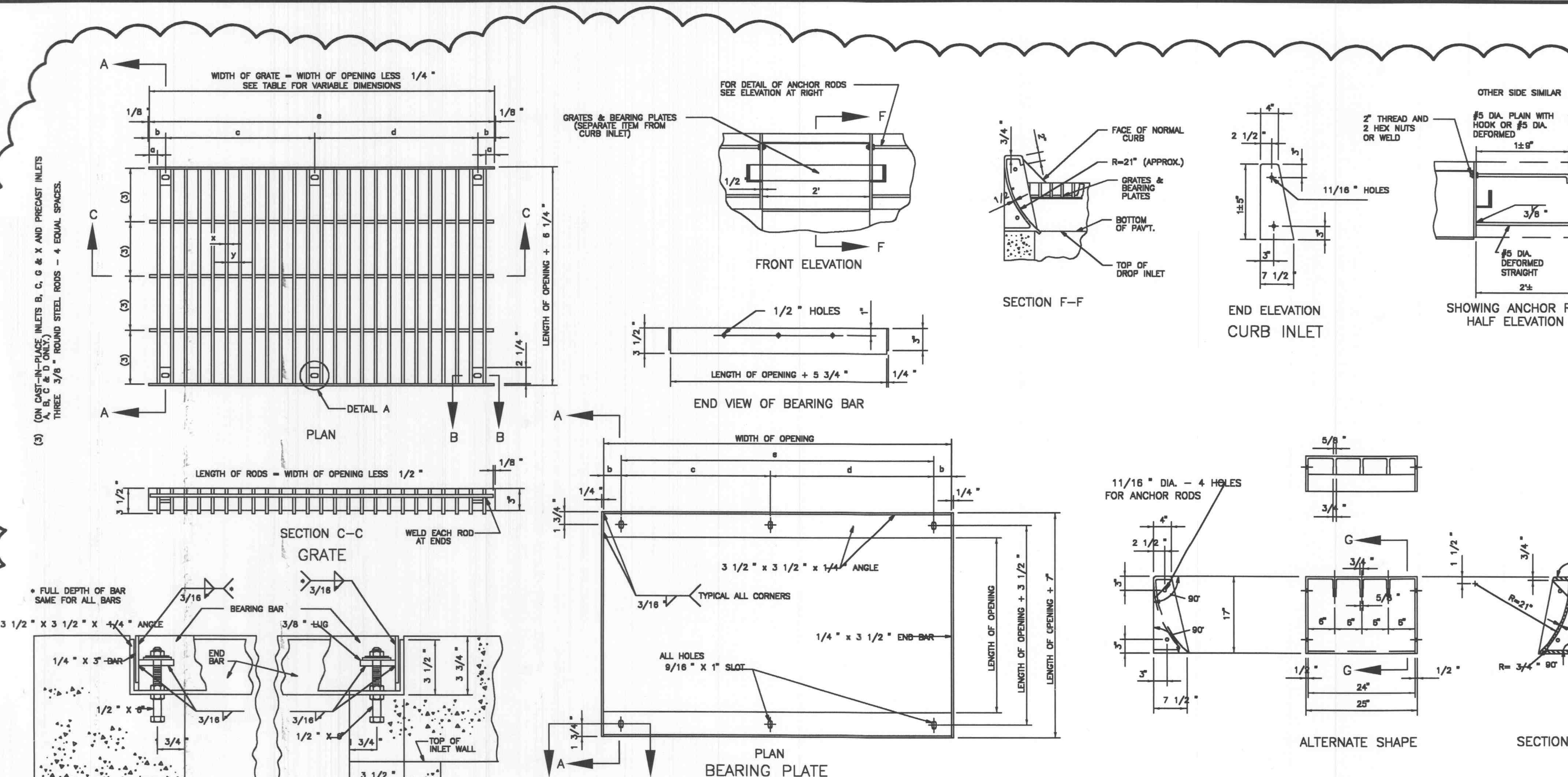

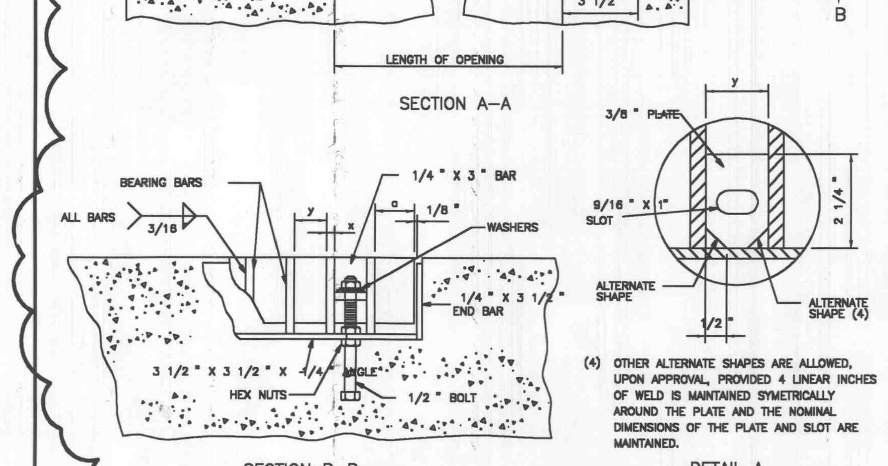

(4) OTHER ALTERNATE SHAPES ARE ALLOWED, UPON APPROVAL, PROVIDED 4 LINEAR INCHES OF WELD IS MAINTAINED SYMETRICALLY AROUND THE PLATE AND THE NOMINAL DIMENSIONS OF THE PLATE AND SLOT ARE MAINTAINED.

WEIGHT AND DIMENSIONS DATA

OPENING		WEIGHT (1)	BEARING BARS				DIMENSIONS					REMARKS
WIDTH	LENGTH	LBS.	x	y	LENGTH	NUMBER	a	b	c	d	e	
2'-0"	2'-0"	190	3/8"	1 1/2"	2'-5 3/4"	12	1 3/8"	2 5/8"			1'-6 3/4"	(2) USE WITH
3'-0"	2'-0"	280	3/8"	1 1/2"	2'-5 3/4"	19	13/16"	2 1/16"			2'-7 7/8"	TYPES B,C,G &
4'-0"	2'-0"	370	3/8"	1 1/2"	2'-5 3/4"	25	1 3/16"	2 7/16"	1'-8 5/8"	1'-10 1/2"		X INLETS
3'-0"	2'-0"	190	3/8"	3"	2'-5 3/4"	11	13/16"	2 13/16"			2'-6 3/8"	USE WITH
3'-0"	3'-0"	330	5/8"	3"	3'-5 3/4"	10	1 1/4"	3 1/2"			2'-5"	TYPE S-1 INLETS
5'-0"	2'-0"	300	3/8"	3"	2'-5 3/4"	18	1"	3"	2'-3"	2'-3"		AND TYPE S
5'-0"	3'-0"	550	5/8"	3"	3'-5 3/4"	17	9/16"	2 13/16"	2'-1 3/8"	2'-5"		HEADWALLS
3'-1"	2'-1"	200	3/8"	3"	2'-6 3/4"	11	1 5/16"	3 5/16"			2'-6 3/8"	USE WITH
3'-1"	3'-1"	340	5/8"	3"	3'-6 3/4"	10	1 3/4"	4"			2'-5"	TYPE S-2
5'-1"	2'-1"	310	3/8"	3"	2'-6 3/4"	18	1 1/2"	3 1/2"	2'-3"	2'-3"		AND S-3
5'-1"	3'-1"	560	5/8"	3"	3'-6 3/4"	17	1 1/16"	3 5/16"	2'-1 3/8"	2'-5"		INLETS ONLY

(1) THE WEIGHT OF THE GRATE AND BEARING PLATE INCLUDES THE BOLTS, NUTS, AND WASHERS AND SHALL BE AS SHOWN WITH A TOLERANCE OF 5 PERCENT.
(2) USE INCLUDES PRECAST TYPES A, B, C & D INLETS.

GENERAL NOTES:

WHEN BOLTS ARE CUT IN THE FIELD, THREADS MUST BE CLEANED TO PERMIT THE FINAL NUT TO RUN FREELY ON THE BOLT.

NO DIRECT PAYMENT WILL BE MADE FOR DRILLED HOLES, ANCHOR RODS IN PLACE, OR OTHER WORK INCIDENTAL TO PLACING CURB INLETS.

THE CONTRACTOR SHALL USE EITHER PLAIN RODS WITH HOOK OR DEFORMED RODS WITHOUT HOOK, AND SHALL ATTACH RODS TO THE CURB INLET EITH WITH TWO NUTS OR BY WELDING.

THE WELDING REQUIREMENTS SHOWN ON THIS DRAWING ARE FOR PEINTED GRATES AND BEARING PLATES. IF GALVANIZED, ALL TIGHTLY CONTACTING SURFACES SHALL BE COMPLETELY SEALED, ON ALL SIDES BY WELDING, PRIOR TO GALVANIZING.

MISSOURI HIGHWAY AND TRANSPORTATION COMMISSION

CURB INLETS
GRATES
BEARING PLATES

03-01-1996 | 614.10S

4 GRATED INLET

Scale: Not To Scale

MANHOLE FRAME & COVER IN PAVED AREAS USE TYPE 1A OR 1B. IN UNPAVED AREAS USED TYPE 2. NO CHANGE IN QUANTITIES REQUIRED FOR FRAME & COVER DETAILS. SEE OTHER DRAWINGS.

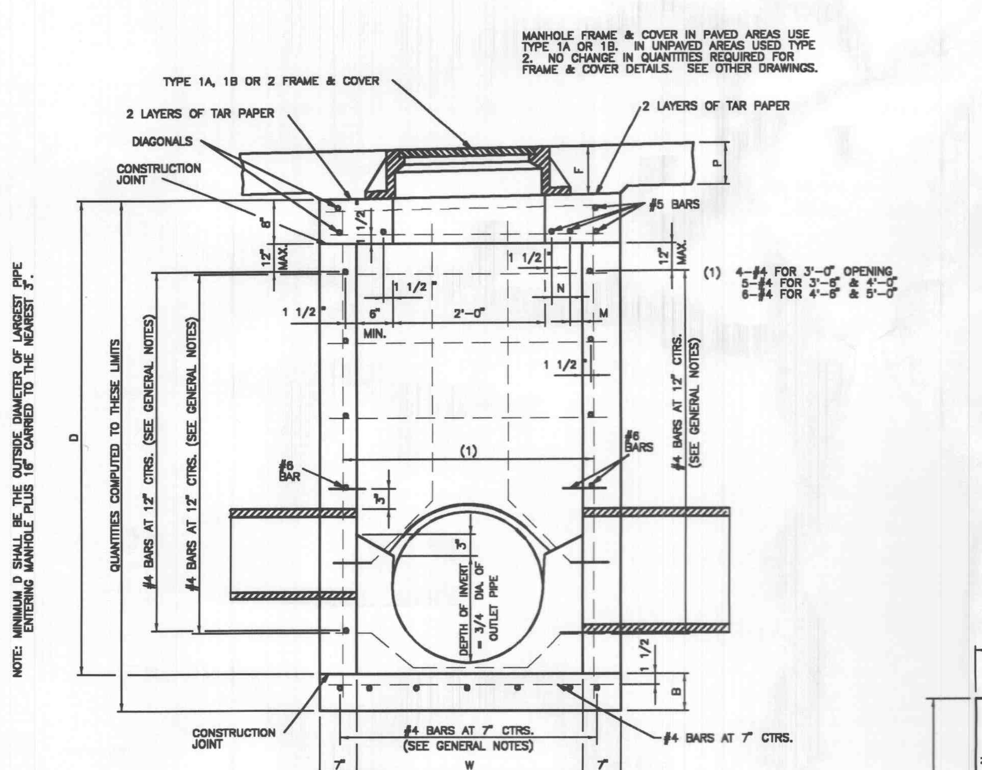

NOTE:
CUT HORIZONTAL BARS AND BEND HORIZONTAL AND VERTICAL BARS AROUND PIPES.

SECTION A-A

VARIABLE DIMENSIONS					
SIZE OF PIPE	W	T	B	M	N
≤ 24"	3'-0"	4'-2"	7"	VARIABLE	2 1/2 "
30"	3'-6"	4'-8"	7"		5 1/2 "
36"	4'-0"	5'-2"	7"		8"
42"	4'-6"	5'-8"	8"		5 1/2 " •
48"	5'-0"	6'-2"	8"		7" •

• 4-#5 BARS ADDED

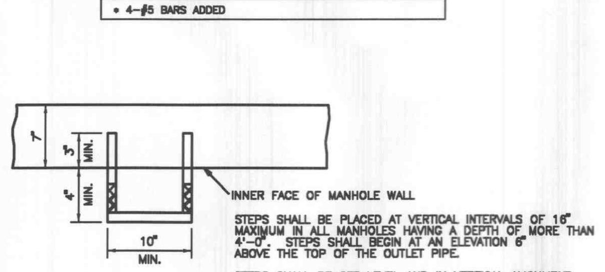

STEPS SHALL BE PLACED AT VERTICAL INTERVALS OF 16" MAXIMUM IN ALL MANHOLES HAVING A DEPTH OF MORE THAN 4'-0". STEPS SHALL BEGIN AT AN ELEVATION 6" ABOVE THE TOP OF THE OUTLET PIPE.

STEPS SHALL BE SET LEVEL AND IN VERTICAL ALIGNMENT.

NO DIRECT PAYMENT WILL BE MADE FOR MANHOLE STEPS.

STEP INSTALLATION

QUANTITIES								
		TO & INCLUDING 20' DEPTH				20' TO & INCLUDING 30' DEPTH		
SIZE (W)		D=3'-3"	D=4'-3"	ADD OR SUBTRACT FOR EACH 1 FT.	ADD OR SUBTRACT FOR EACH 3 IN.	ADD OR SUBTRACT FOR EACH 1 FT.	ADD OR SUBTRACT FOR EACH 3 IN.	ADDITIONAL STEEL IN BOTTOM DIFF. IN #4 & #6 BARS
3'-0" X 3'-0"	C	1.62	1.93	0.31	0.08	0.31	0.08	
	S	157.90	176.80	18.60	2.00	20.64	5.16	30.14
3'-0" X 3'-6"	C	1.77	2.11	0.33	0.08	0.33	0.08	
	S	173.80	194.60	20.60	2.30	23.12	5.78	34.85
3'-0" X 4'-0"	C	1.93	2.28	0.35	0.09	0.35	0.09	
	S	187.10	208.60	21.30	2.30	24.27	6.07	39.56
3'-0" X 4'-6"	C	2.16	2.53	0.38	0.09	0.38	0.09	
	S	211.20	234.70	23.30	2.70	26.75	6.69	44.26
3'-0" X 5'-0"	C	2.32	2.71	0.40	0.10	0.40	0.10	
	S	219.60	243.80	24.00	2.70	27.90	6.97	48.97
3'-6" X 3'-6"	C	1.94	2.29	0.35	0.09	0.35	0.09	
	S	192.40	215.10	22.70	2.70	25.60	6.40	40.27
3'-6" X 4'-0"	C	2.10	2.48	0.38	0.09	0.38	0.09	
	S	204.30	227.70	23.40	2.70	26.75	6.69	45.69
3'-6" X 4'-6"	C	2.35	2.75	0.40	0.10	0.40	0.10	
	S	230.00	255.50	25.30	3.00	29.23	7.31	51.11
3'-6" X 5'-0"	C	2.53	2.95	0.42	0.10	0.42	0.10	
	S	240.90	267.10	26.00	3.00	30.38	7.60	56.53
4'-0" X 4'-0"	C	2.28	2.68	0.40	0.10	0.40	0.10	
	S	216.70	240.80	24.10	2.70	27.90	6.97	51.83
4'-0" X 4'-6"	C	2.55	2.97	0.42	0.10	0.42	0.10	
	S	246.40	272.60	26.00	3.00	30.38	7.60	57.96
4'-0" X 5'-0"	C	2.74	3.18	0.44	0.11	0.44	0.11	
	S	255.60	282.50	26.70	3.00	31.53	7.88	64.10
4'-6" X 4'-6"	C	2.75	3.19	0.44	0.11	0.44	0.11	
	S	276.80	304.90	28.00	3.30	32.86	8.22	64.81
4'-6" X 5'-0"	C	2.94	3.41	0.46	0.12	0.46	0.12	
	S	289.40	318.20	28.70	3.30	34.01	8.50	71.66
5'-0" X 5'-0"	C	3.15	3.64	0.48	0.12	0.48	0.12	
	S	299.80	329.30	29.40	3.30	35.16	8.79	79.23

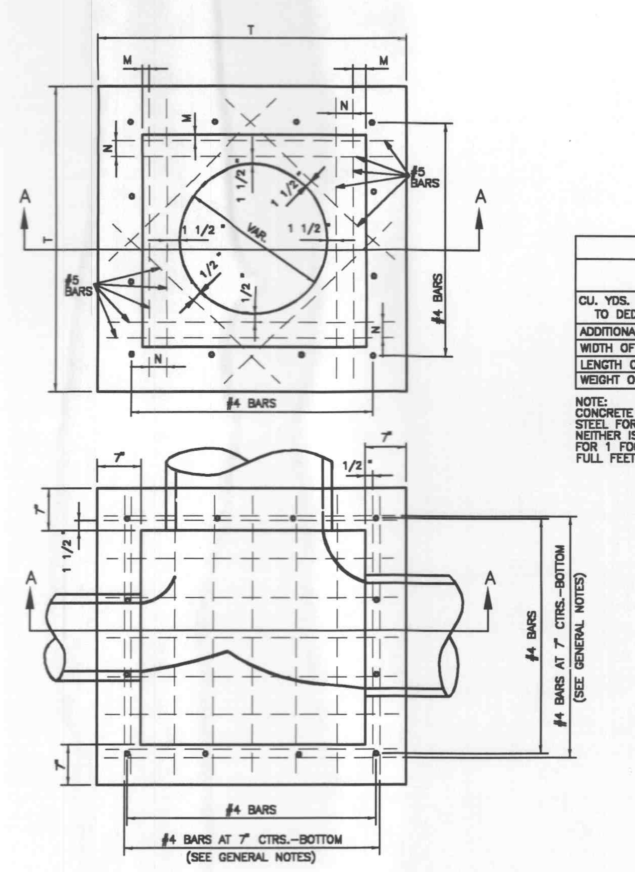

TO AND INCLUDING 20 FOOT DEPTH

NOTE:
TO COMPUTE THE QUANTITIES FOR "D"s NOT SHOWN. REFER TO TABLE FOR THE SIZE OF MANHOLE REQUIRED. THEN TO THESE QUANTITIES ADD THE QUANTITIES SHOWN FOR 1 FOOT TIMES THE NUMBER OF FULL FOOT INCREMENTS IN THE ADDITIONAL "D" REQUIRED. THEN ADD THE QUANTITIES GIVEN FOR 3" TIMES THE NUMBER OF 3" INCREMENTS IN THE REMAINING FOOT OF "D".

FOR EXAMPLE: QUANTITIES FOR 3'-0" X 4'-0" MANHOLE WITH 6'-9" "D" HAVING 1-18", 1-24" & 1-36" PIPE OPENINGS ARE DETERMINED AS FOLLOWS:

"D" REQUIRED = 6'-9"
"D" GIVEN IN TABLE = 4'-3"
"D" ADDITIONAL = 2'-6"

	CONC.	STEEL
FROM TABLE FOR 4'-3" "D"	2.28	208.6
ADD (2 X QUANTITIES FOR 1 FOOT)	0.70	42.6
ADD (6" = 2 X 3") (2 X QUANTITIES FOR 3")	0.18	4.6
GROSS	3.16	255.8
DEDUCT CONCRETE FOR THE PIPE OPENINGS	0.40	
ADD STEEL FOR PIPE OPENING 2-3' & 1-4' WALLS		19.5
TOTAL	2.76	275.3
USE	2.80	280.0

MORE THAN 20 FOOT TO AND INCLUDING 30 FOOT DEPTH

FIRST, COMPUTE QUANTITIES FOR 20' DEPTH FROM THE TABLE "TO AND INCLUDING 20' DEPTHS".

FOR EXAMPLE: QUANTITIES FOR 3'-0" X 4'-0" MANHOLE WITH 20'-0" "D" HAVING 1-18", 1-24" AND 1-36" PIPE OPENINGS ARE DETERMINED AS FOLLOWS:

"D" REQUIRED = 20'-0"
"D" GIVEN IN TABLE = 4'-3"
"D" ADDITIONAL = 15'-9"

	CONC.	STEEL
FROM TABLE FOR 4'-3" "D"	2.28	208.6
ADD (15 X QUANTITIES FOR 1 FOOT)	5.25	319.5
ADD (9"= 3X3")(3 X QUANTITY FOR 3")	0.27	6.9
GROSS	7.80	535.0
DEDUCT CONCRETE FOR THE PIPE OPENINGS	0.40	
ADD STEEL FOR PIPE OPENING 2-3' & 1-4' WALLS		19.50
SUB-TOTAL (20' DEPTH)	7.40	554.5

SECOND, COMPUTE QUANTITIES FOR DEPTHS BEYOND 20 FEET TO A MAXIMUM OF 30 FEET USING THE TABLE "20-FOOT TO AND INCLUDING 30-FOOT DEPTH". AND ADD TO THE QUANTITIES FOR 20-FOOT DEPTH. ALSO ADD THE DIFFERENCE IN STEEL IN THE BOTTOM DUE TO AN INCREASE IN SIZE OF BARS FROM #4 TO #6 BARS ON 7-INCH CENTERS.

FOR EXAMPLE:

"D" REQUIRED = 30'-0"
"D" COMPUTED = 20'-0"
"D" ADDITIONAL = 10'-0"

	CONC.	STEEL
ADD CONCRETE (10 X QUANTITY FOR 1 FOOT)	3.50	
ADD STEEL (10 X QUANTITY FOR 1 FOOT)		242.70
ADD STEEL (ADDITIONAL STEEL IN BOTTOM)		39.56
TOTAL (30 FT. DEPTH)	10.90	836.76
USE	10.9	840.0

FOR PIPE OPENINGS								
PIPE SIZES	12"	15"	18"	24"	30"	36"	42"	48"
CU. YDS. CONC. TO DEDUCT	0.03	0.04	0.06	0.11	0.16	0.23	0.31	0.40
ADDITIONAL STEEL REQUIRED FOR PIPE OPENING								
WIDTH OF WALL REQUIRED FOR PIPE				3'-0"	3'-6"	4'-0"	4'-6"	5'-0"
LENGTH OF #6 BAR REQUIRED				4'-0"	4'-6"	5'-0"	5'-6"	6'-0"
WEIGHT OF BAR LBS.				6.0	6.8	7.5	8.3	9.0

NOTE:
CONCRETE QUANTITIES IN TABLE INCLUDE INVERT. THE QUANTITY OF STEEL FOR 3" OF "D" IS NOT 1/4 OF THAT FOR 1 FOOT OF "D", NEITHER IS THE QUANTITY FOR 6" OF "D" EQUAL TO 1/2 THAT FOR 1 FOOT OF "D", SO USE QUANTITY IN 1 FOOT COLUMN FOR FULL FEET AND IN 3" COLUMN FOR FRACTIONAL FEET.

GENERAL NOTES:

THE MAXIMUM DEPTH OF MANHOLE USING #4 HORIZONTAL BARS AT 12" CENTERS IS 20'.

OVER 20' DEPTH, HORIZONTAL BARS SHALL BE INCREASED TO A #5 BAR AT 10" CENTERS TO A MAXIMUM DEPTH OF 30'.

OVER 30' DEPTH WILL REQUIRE A SPECIAL DESIGN.

BOTTOM STEEL AT MORE THAN 20' DEPTH TO A MAXIMUM DEPTH OF 30' IS INCREASED TO #6 BARS AT 7" CENTERS.

MISSOURI HIGHWAY AND TRANSPORTATION COMMISSION

CONCRETE MANHOLES

EFFECTIVE: 04-01-1983 | 604.30F

5 MoDOT CONCRETE MANHOLE

Scale: Not To Scale

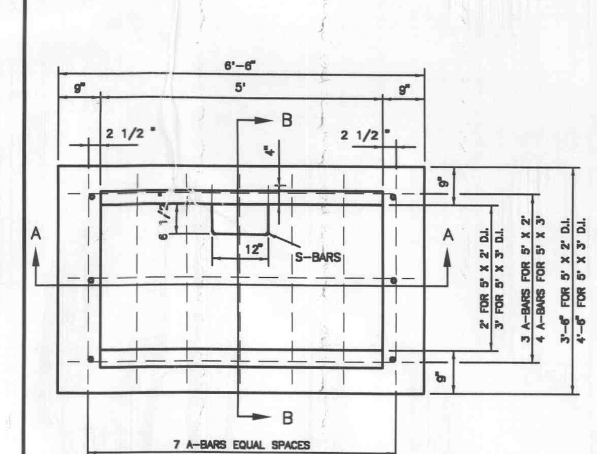

TYPICAL PLAN

QUANTITIES												
D	TYPE S-1 5' X 2' CONC CY	TYPE S-1 5' X 2' STEEL LBS.	TYPE S-1 5' X 3' CONC CY	TYPE S-1 5' X 3' STEEL LBS.	TYPE S-2 5' X 2' CONC CY	TYPE S-2 5' X 2' STEEL LBS.	TYPE S-2 5' X 3' CONC CY	TYPE S-2 5' X 3' STEEL LBS.	TYPE S-3 5' X 2' CONC CY	TYPE S-3 5' X 2' STEEL LBS.	TYPE S-3 5' X 3' CONC CY	TYPE S-3 5' X 3' STEEL LBS.
1'-0"									1.42	61	1.68	74
1'-3"									1.54	64	1.82	77
1'-6"					1.57	77	1.89	92	1.66	79	1.95	94
1'-9"					1.68	80	2.02	95	1.78	82	2.08	97
2'-0"	1.69	77	1.98	92	1.80	83	2.15	98	1.90	84	2.21	100
2'-3"	1.81	80	2.12	95	1.92	85	2.28	101	2.01	87	2.34	103
2'-6"	1.93	95	2.25	112	2.04	101	2.42	118	2.13	102	2.48	120
3'-0"	2.16	101	2.51	118	2.27	106	2.68	124	2.37	108	2.74	126
3'-6"	2.40	119	2.78	138	2.51	124	2.94	144	2.60	126	3.00	146
4'-0"	2.64	132	3.04	152	2.75	137	3.21	158	2.84	139	3.27	160
4'-6"	2.87	150	3.30	172	2.98	155	3.47	178	3.08	157	3.53	180
5'-0"	3.11	159	3.57	182	3.22	165	3.73	188	3.31	166	3.80	190
5'-6"	3.35	177	3.83	202	3.46	183	4.00	208	3.55	184	4.06	210
6'-0"	3.58	188	4.10	213	3.69	193	4.28	219	3.78	195	4.32	221
6'-6"	3.82	206	4.36	233	3.93	211	4.53	239	4.02	213	4.59	241
7'-0"	4.05	215	4.62	243	4.16	220	4.79	249	4.26	222	4.85	251
7'-6"	4.29	233	4.89	263	4.40	238	5.05	269	4.49	240	5.12	272
8'-0"	4.53	242	5.15	273	4.64	248	5.32	280	4.73	249	5.38	282
8'-6"	4.76	260	5.42	293	4.87	266	5.58	300	4.96	267	5.64	302
9'-0"	5.00	270	5.68	303	5.11	275	5.85	310	5.20	277	5.91	312
9'-6"	5.23	288	5.94	323	5.34	293	6.11	330	5.44	295	6.17	332
10'-0"	5.47	297	6.21	333	5.58	303	6.37	340	5.67	304	6.43	342

CONCRETE DEDUCTION FOR PIPE OPENINGS
12" PIPE = 0.04 CY
15" PIPE = 0.06 CY
18" PIPE = 0.08 CY
21" PIPE = 0.11 CY
24" PIPE = 0.14 CY
30" PIPE = 0.21 CY

QUANTITIES INCLUDE 0.15 CU. YDS. CONCRETE FOR INVERT

BAR BILLS

D	TYPE S-1 5' X 2' A-BARS 18 AT	TYPE S-1 5' X 2' B-BARS 6'-3" NO.	TYPE S-1 5' X 2' C-BARS 3'-3" NO.	TYPE S-1 5' X 3' A-BARS 18 AT	TYPE S-1 5' X 3' B-BARS 6'-3" NO.	TYPE S-1 5' X 3' C-BARS 4'-3" NO.	TYPE S-2 5' X 2' A-BARS 9 AT	TYPE S-2 5' X 2' A-BARS 7 AT	TYPE S-2 5' X 2' B-BARS 6'-3" NO.	TYPE S-2 5' X 2' C-BARS 3'-3" NO.	TYPE S-2 5' X 3' A-BARS 11 AT	TYPE S-2 5' X 3' A-BARS 7 AT	TYPE S-2 5' X 3' B-BARS 6'-3" NO.	TYPE S-2 5' X 3' C-BARS 4'-3" NO.
1'-0"														
1'-3"														
1'-6"							1'-9"	[illegible]	8	11	1'-9"	2'-3"	9	11
1'-9"							2'-0"	2'-3"	8	11	2'-0"	2'-6"	9	11
2'-0"	2'-3"	7	11	2'-3"	8	11	2'-3"	2'-6"	8	11	2'-3"	2'-9"	9	11
2'-3"	2'-6"	7	11	2'-6"	8	11	2'-6"	2'-9"	8	11	2'-6"	3'-0"	9	11
2'-6"	2'-9"	9	13	2'-9"	10	13	2'-9"	3'-0"	10	13	2'-9"	3'-3"	11	13
3'-0"	3'-3"	9	13	3'-3"	10	13	3'-3"	3'-6"	10	13	3'-3"	3'-9"	11	13
3'-6"	3'-9"	11	15	3'-9"	12	15	3'-9"	4'-0"	12	15	3'-9"	4'-3"	13	15
4'-0"	4'-3"	11	15	4'-3"	12	15	4'-3"	4'-6"	12	15	4'-3"	4'-9"	13	15
4'-6"	4'-9"	13	17	4'-9"	14	17	4'-9"	5'-0"	14	17	4'-9"	5'-3"	15	17
5'-0"	5'-3"	13	17	5'-3"	14	17	5'-3"	5'-6"	14	17	5'-3"	5'-9"	15	17
5'-6"	5'-9"	15	19	5'-9"	16	19	5'-9"	6'-0"	16	19	5'-9"	6'-3"	17	19
6'-0"	6'-3"	15	19	6'-3"	16	19	6'-3"	6'-6"	16	19	6'-3"	6'-9"	17	19
6'-6"	6'-9"	17	21	6'-9"	18	21	6'-9"	7'-0"	18	21	6'-9"	7'-3"	19	21
7'-0"	7'-3"	17	21	7'-3"	18	21	7'-3"	7'-6"	18	21	7'-3"	7'-9"	19	21
7'-6"	7'-9"	19	23	7'-9"	20	23	7'-9"	8'-0"	20	23	7'-9"	8'-3"	21	23
8'-0"	8'-3"	19	23	8'-3"	20	23	8'-3"	8'-6"	20	23	8'-3"	8'-9"	21	23
8'-6"	8'-9"	21	25	8'-9"	22	25	8'-9"	9'-0"	22	25	8'-9"	9'-3"	23	25
9'-0"	9'-3"	21	25	9'-3"	22	25	9'-3"	9'-6"	22	25	9'-3"	9'-9"	23	25
9'-6"	9'-9"	23	27	9'-9"	24	27	9'-9"	10'-0"	24	27	9'-9"	10'-3"	25	27
10'-0"	10'-3"	23	27	10'-3"	24	27	10'-3"	10'-6"	24	27	10'-3"	10'-9"	25	27

D	TYPE S-3 5' X 2' A-BARS 3 AT	TYPE S-3 5' X 2' A-BARS 4 AT	TYPE S-3 5' X 2' A-BARS 9 AT	TYPE S-3 5' X 2' B-BARS 6'-3" NO.	TYPE S-3 5' X 2' C-BARS 3'-3" NO.	TYPE S-3 5' X 3' A-BARS 4 AT	TYPE S-3 5' X 3' A-BARS 4 AT	TYPE S-3 5' X 3' A-BARS 10 AT	TYPE S-3 5' X 3' B-BARS 6'-3" NO.	TYPE S-3 5' X 3' C-BARS 4'-3" NO.	STEPS S-BARS 2'-9" NO.
1'-0"	2'-3"	1'-9"	1'-6"	5	10	2'-3"	1'-9"	1'-6"	6	10	
1'-3"	2'-6"	2'-0"	1'-9"	5	10	2'-6"	2'-0"	1'-9"	6	10	
1'-6"	2'-9"	2'-3"	2'-0"	7	12	2'-9"	2'-3"	2'-0"	8	12	
1'-9"	3'-0"	2'-6"	2'-3"	7	12	3'-0"	2'-6"	2'-3"	8	12	
2'-0"	3'-3"	2'-9"	2'-6"	7	12	3'-3"	2'-9"	2'-6"	8	12	
2'-3"	3'-6"	3'-0"	2'-9"	7	12	3'-6"	3'-0"	2'-9"	8	12	
2'-6"	3'-9"	3'-3"	3'-0"	9	14	3'-9"	3'-3"	3'-0"	10	14	
3'-0"	4'-3"	3'-9"	3'-6"	9	14	4'-3"	3'-9"	3'-6"	10	14	
3'-6"	4'-9"	4'-3"	4'-0"	11	16	4'-9"	4'-3"	4'-0"	12	16	
4'-0"	5'-3"	4'-9"	4'-6"	11	16	5'-3"	4'-9"	4'-6"	12	16	2
4'-6"	5'-9"	5'-3"	5'-0"	13	18	5'-9"	5'-3"	5'-0"	14	18	2
5'-0"	6'-3"	5'-9"	5'-6"	13	18	6'-3"	5'-9"	5'-6"	14	18	3
5'-6"	6'-9"	6'-3"	6'-0"	15	20	6'-9"	6'-3"	6'-0"	16	20	3
6'-0"	7'-3"	6'-9"	6'-6"	15	20	7'-3"	6'-9"	6'-6"	16	20	4
6'-6"	7'-9"	7'-3"	7'-0"	17	22	7'-9"	7'-3"	7'-0"	18	22	4
7'-0"	8'-3"	7'-9"	7'-6"	17	22	8'-3"	7'-9"	7'-6"	18	22	5
7'-6"	8'-9"	8'-3"	8'-0"	19	24	8'-9"	8'-3"	8'-0"	20	24	5
8'-0"	9'-3"	8'-9"	8'-6"	19	24	9'-3"	8'-9"	8'-6"	20	24	6
8'-6"	9'-9"	9'-3"	9'-0"	21	26	9'-9"	9'-3"	9'-0"	22	26	6
9'-0"	10'-3"	9'-9"	9'-6"	21	26	10'-3"	9'-9"	9'-6"	22	26	7
9'-6"	10'-9"	10'-3"	10'-0"	23	28	10'-9"	10'-3"	10'-0"	24	28	7
10'-0"	11'-3"	10'-9"	10'-6"	23	28	11'-3"	10'-9"	10'-6"	24	28	8

A, B, AND C BARS #4 S-BARS #6

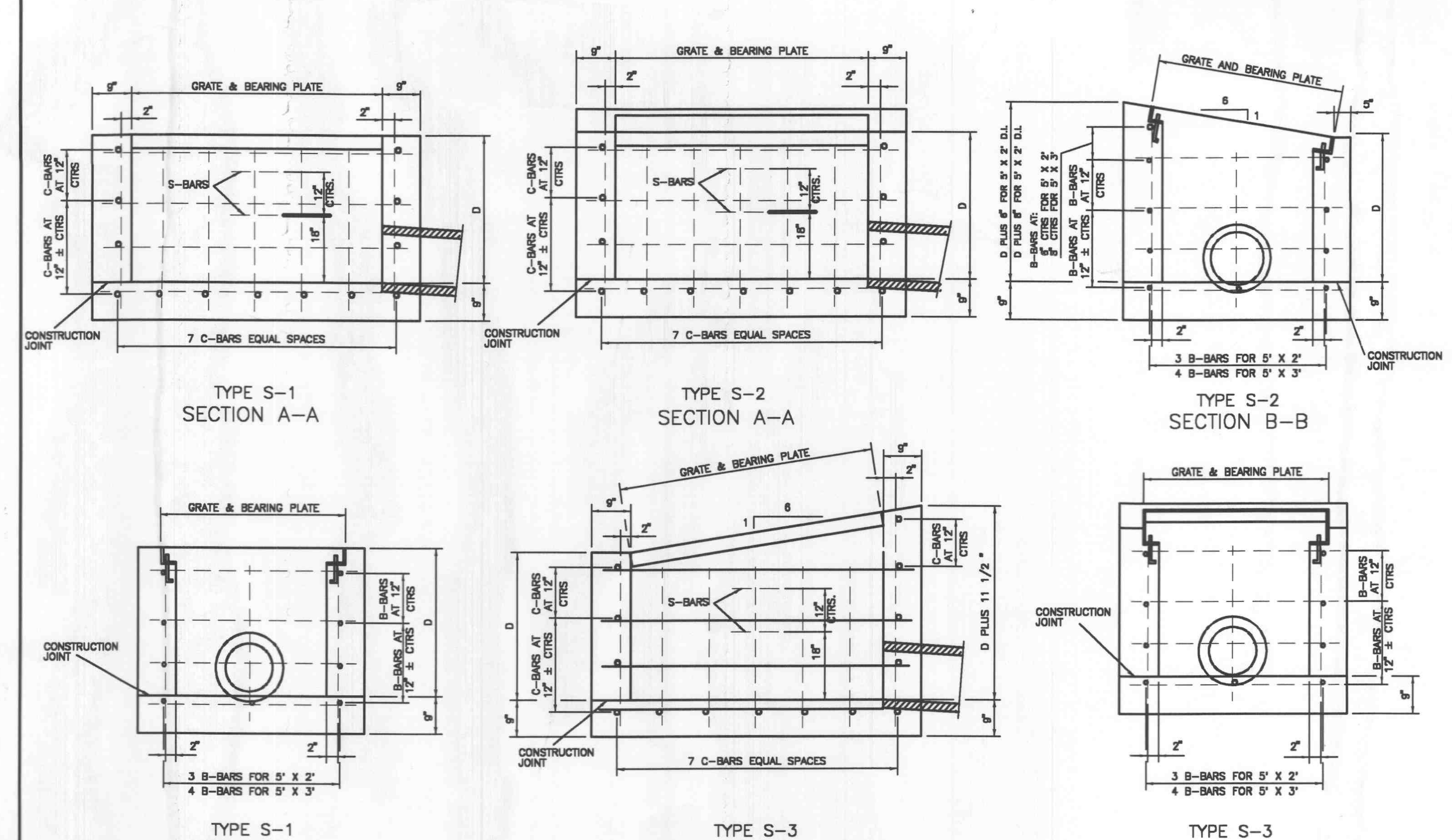

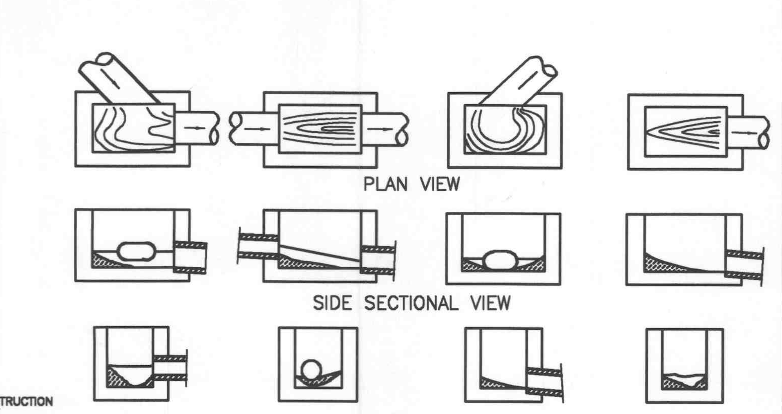

TYPICAL INVERTS

GENERAL NOTES:

THE TYPE OF DROP INLET, "S-1", "S-2" OR "S-3" WILL BE DESIGNATED ON THE PLANS. TYPICAL LOCATION DETAILS ARE INDICATED ON SHEET 3 OF 3.

NO DIRECT PAYMENT WILL BE MADE FOR CUTTING OR BENDING THE REINFORCING STEEL OR CUTTING PIPE AT PIPE OPENINGS.

THE CONCRETE FOR INVERTS SHALL BE PLACED AFTER COMPLETION OF THE DROP INLET BOX.

MISSOURI HIGHWAY AND TRANSPORTATION COMMISSION

DROP INLET
TYPE S

EFFECTIVE: 05-01-1997 | 604.27E

6 MoDOT DROP INLET (Type S)

Scale: Not To Scale

ENGINEERS
ARCHITECTS
SURVEYORS
SCIENTISTS

Farnsworth
GROUP

20 ALLEN AVENUE, SUITE 200
ST LOUIS, MISSOURI 63119
(314) 962-7900 / (314) 962-1253 Fax

www.f-w.com

ISSUE:

#	Date:	Description:
1	2/13/04	City of O'Fallon Comments
2	2/13/04	Duckett Creek Sanitary District Comments
3	2/13/04	Cottleville Fire Protection District Comments
4	2/13/04	MoDot Comments
5	2/13/04	Corps of Engineers Comments

CALL BEFORE YOU DIG - DRILL - BLAST
1-800-344-7483
(TOLL FREE)

MISSOURI ONE CALL SYSTEM, INC.
* FIBER OPTIC PRESENT *
MoDOT (314) 340-4100

PROJECT:
PERSIMMON POINTE HOTEL DEVELOPMENT

STATE OF MISSOURI
JAMES T. BURKE
NUMBER E-13347
REGISTERED PROFESSIONAL ENGINEER

#4130 HIGHWAY 40-61
O'FALLON, MO

Date:	12-30-03
Design/Drawn:	DB
Approved:	JTB
Book No.:	-

SHEET TITLE:
DETAILS

SHEET NUMBER:
C11

SHEET 15 OF 36

Project No.: 299163.12
Planning & Zoning File: #3103.03

XRef Files:
| dnowak | P:\1999\299163.12-hwy 40 @ rte k\dwg\299163-DTLS.DWG | DATE: 02/13/2004 | Time: 14:25 |