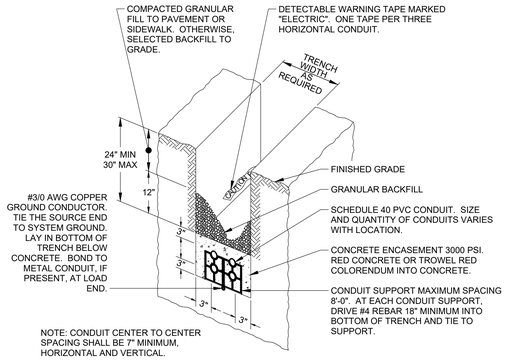

05 DUCT BANK DETAIL

no scale

NOTE: USE FOR ALL TRAFFIC PATHWAYS WITHIN PAVED AREAS FOR SERVICE ENTRANCE SECONDARY AND PRIMARY ONLY.

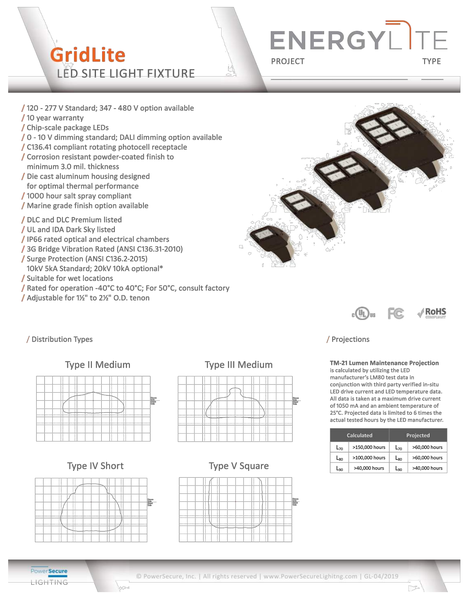

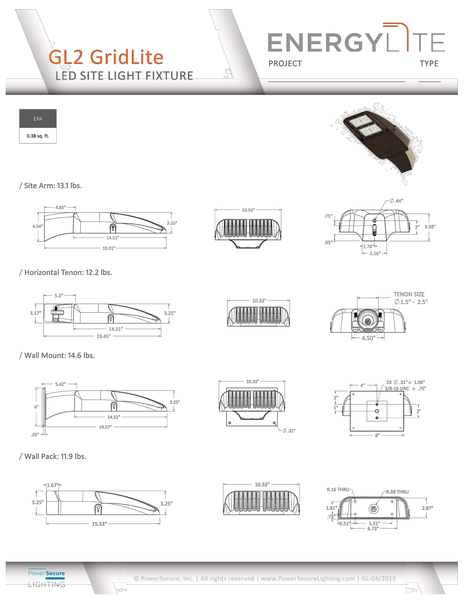

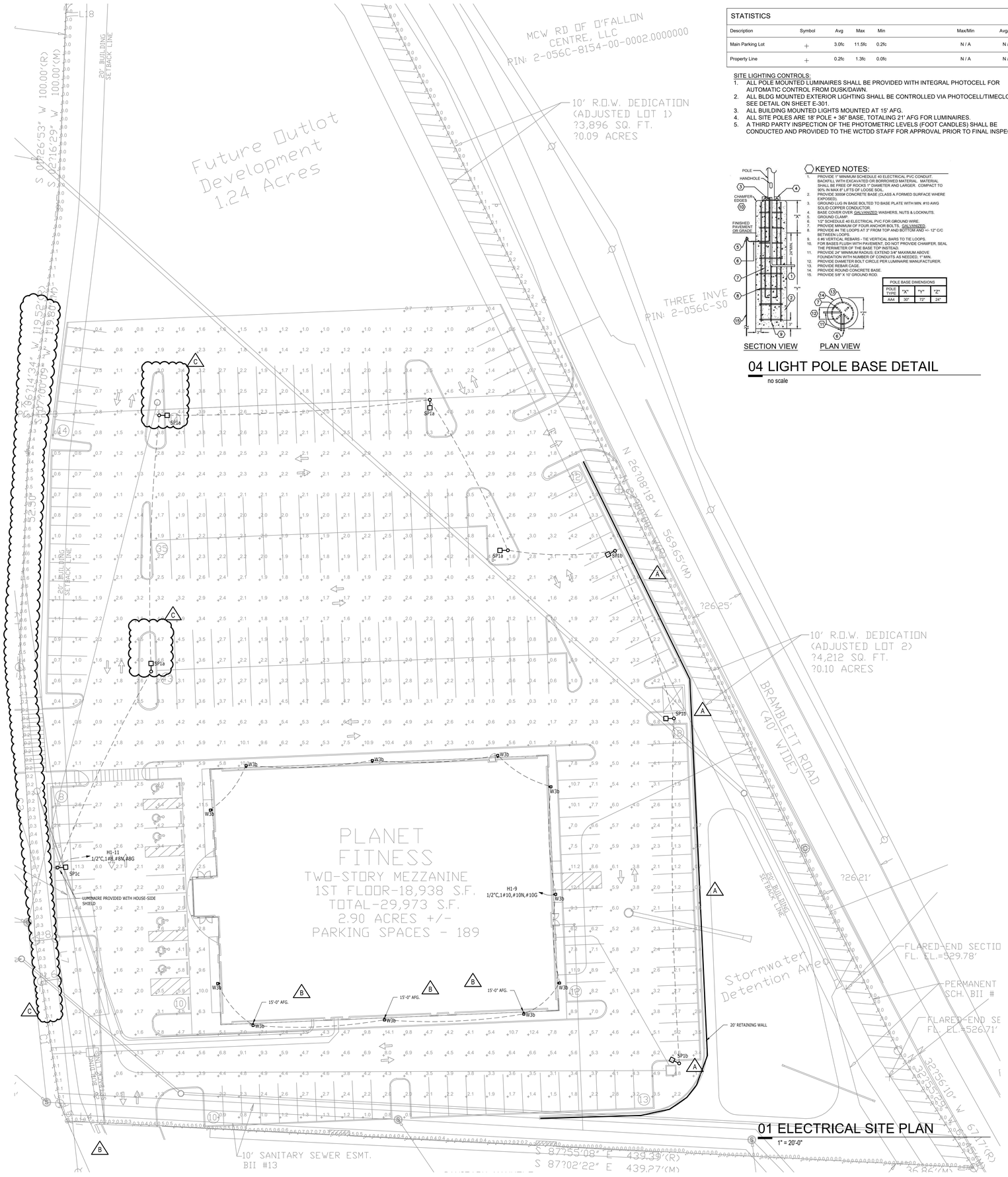

01 ELECTRICAL SITE PLAN

1" = 20'-0"

STATISTICS

Description	Symbol	Avg	Max	Min	Max/Min	Avg/Min
Main Parking Lot	+	3.0fc	11.5fc	0.2fc	N / A	N / A
Property Line	+	0.2fc	1.3fc	0.0fc	N / A	N / A

SITE LIGHTING CONTROLS:

1. ALL POLE MOUNTED LUMINAIRES SHALL BE PROVIDED WITH INTEGRAL PHOTOCELL FOR AUTOMATIC CONTROL FROM DUSK/DAWN.
2. ALL BLDG MOUNTED EXTERIOR LIGHTING SHALL BE CONTROLLED VIA PHOTOCELL/TIMECLOCK. SEE DETAIL ON SHEET E-301.
3. ALL BUILDING MOUNTED LIGHTS MOUNTED AT 15' AFG.
4. ALL SITE POLES ARE 18' POLE + 36" BASE, TOTALING 21' AFG FOR LUMINAIRES.
5. A THIRD PARTY INSPECTION OF THE PHOTOMETRIC LEVELS (FOOT CANDLES) SHALL BE CONDUCTED AND PROVIDED TO THE WCTDD STAFF FOR APPROVAL PRIOR TO FINAL INSPECTION.

KEYED NOTES:

1. PROVIDE 1" MINIMUM SCHEDULE 40 ELECTRICAL PVC CONDUIT. BACKFILL WITH EXCAVATED OR BORROWED MATERIAL. MATERIAL SHALL BE FREE OF ROCKS 1" DIAMETER AND LARGER. COMPACT TO 90% IN MAX 8" LIFTS OF LOOSE SOIL.
2. PROVIDE 3000# CONCRETE BASE (CLASS A FORMED SURFACE WHERE EXPOSED).
3. GROUND LUG IN BASE BOLTED TO BASE PLATE WITH MIN. #10 AWG SOLID COPPER CONDUCTOR.
4. BASE COVER OVER GALVANIZED WASHERS, NUTS & LOCKNUTS.
5. GROUND CLAMP.
6. 1/2" SCHEDULE 40 ELECTRICAL PVC FOR GROUND WIRE.
7. PROVIDE MINIMUM OF FOUR ANCHOR BOLTS. GALVANIZED.
8. PROVIDE #4 TIE LOOPS AT 3" FROM TOP AND BOTTOM AND +/- 12" C/C BETWEEN LOOPS.
9. 6 #6 VERTICAL REBARS - TIE VERTICAL BARS TO TIE LOOPS.
10. FOR BASES FLUSH WITH PAVEMENT, DO NOT PROVIDE CHAMFER. SEAL PAVEMENT JOINT WITH SEALANT.
11. PROVIDE 24" MINIMUM RADIUS. EXTEND 3/4" MAXIMUM ABOVE FOUNDATION WITH NUMBER OF CONDUITS AS NEEDED. 1" MIN.
12. PROVIDE DIAMETER BOLT CIRCLE PER LUMINAIRE MANUFACTURER.
13. PROVIDE REBAR CAGE.
14. PROVIDE ROUND CONCRETE BASE.
15. PROVIDE 5/8" X 10' GROUND RODS.

POLE BASE DIMENSIONS			
POLE TYPE	"X"	"Y"	"Z"
AA4	30"	72"	24"

04 LIGHT POLE BASE DETAIL

no scale

STUDIO
226 S. Market St.
Troy, OH 45373
937.980.9362

MSW DESIGN LLC
MECHANICAL - ELECTRICAL - PLUMBING
5828 Zarley Street - Suite A
New Albany, OH 43054
614.741.4010
CONTACTUS@MSW-LLC.COM

STATE OF MISSOURI
TIMOTHY L RABERDING
NUMBER PE-2006026424
REGISTERED PROFESSIONAL ENGINEER

PLANET FITNESS
914 Highway K
O' Fallon, MO 63366

MTSTUDIO PROJECT NUMBER: 21008

ISSUED / REVISED	DATE
ISSUED FOR PERMIT/BID	07.05.2021
A ADDENDUM A	07.12.2021
B ADDENDUM B	08.10.2021
C ADDENDUM C	08.25.2021

Electrical Site Plan

ESL-100