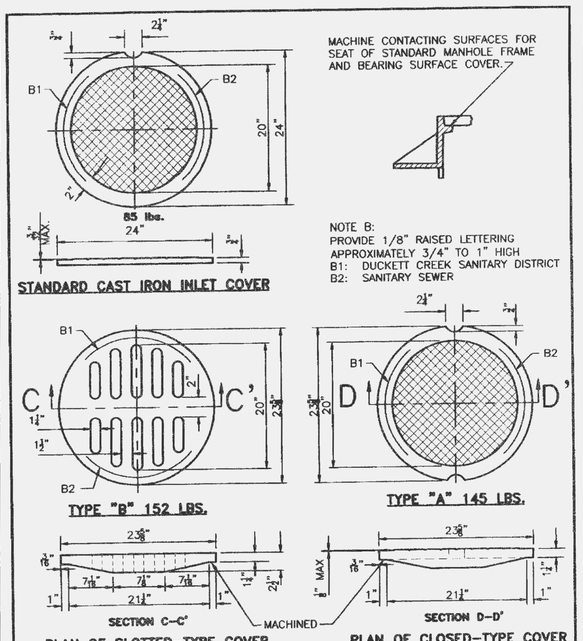

STANDARD CAST IRON MANHOLE COVERS

Duckett Creek Sanitary District				
CAST IRON COVERS MANHOLES AND INLETS	Dwn By: BSM	App By: KLA	Detail No.	
	Chd By: MDOB	Date: 12-22-00	13	

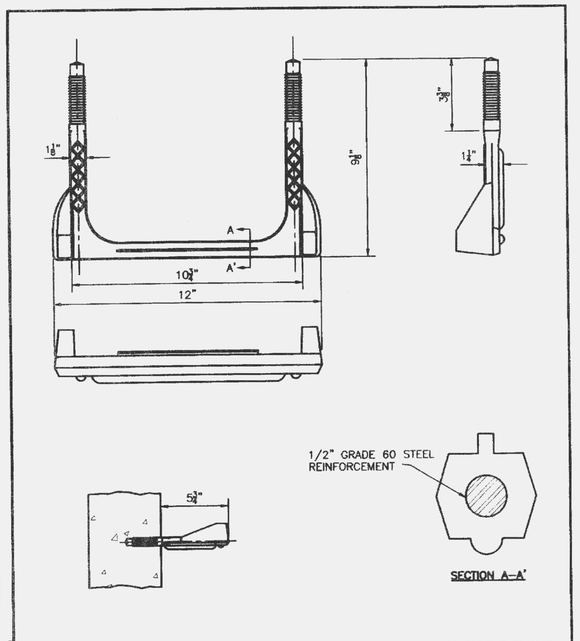

Duckett Creek Sanitary District				
MANHOLE STEP PRECAST MANHOLE	Dwn By: BSM	App By: KLA	Detail No.	
	Chd By: MDOB	Date: 1-3-01	18	

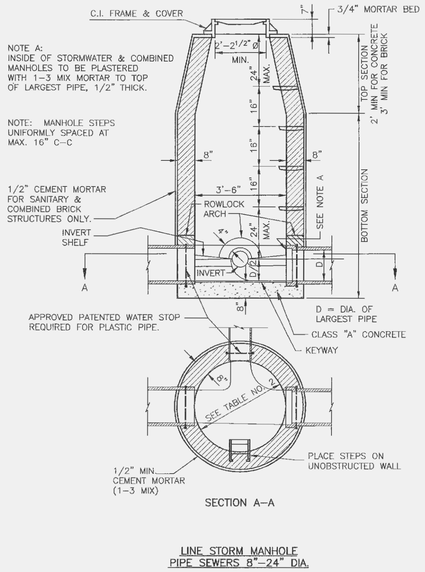

LINE STORM MANHOLE PIPE SEWERS 8"–24" DIA.

REVISIONS:
04-06-04 PER CITY COMMENTS

DETAILS

DARDENNE PRAIRIE PLAZA

03-12453 03/03/04

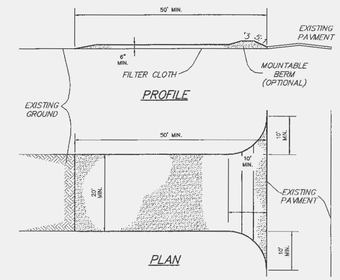

STABILIZED CONSTRUCTION ENTRANCE/WASHDOWN AREA

CONSTRUCTION SPECIFICATIONS

1. Stone Size – Use 2" stone, or reclaimed or recycled concrete equivalent.
2. Length – As required, but not less than 50 feet (except on a single residence lot where a 30 foot minimum length would apply).
3. Thickness – Not less than six (6) inches.
4. Width – Twenty (20) foot minimum, but not less than the full width at points where ingress or egress occurs.
5. Filter Cloth – Will be placed over the entire area prior to placing of stone. Filter will not be required on a single family residence lot.
6. Surface Water – All surface water flowing or diverted toward construction entrances shall be piped across the entrance. If piping is impractical, a mountable berm with 5:1 slopes will be permitted.
7. Maintenance – The entrance shall be maintained in a condition which will prevent tracking or flowing of sediment onto public rights-of-way. This may require periodic top dressing with additional stone as conditions demand and repair and/or cleanout of any measures used to trap sediment. All sediment spilled, dropped, washed or tracked onto public rights-of-way must be removed immediately.
8. Washing – Wheels shall be cleaned to remove sediment prior to entrance onto public rights-of-way. When washing is required, it shall be done on an area stabilized with stone and which drains into an approved sediment trapping device.
9. Periodic inspection and needed maintenance shall be provided after each rain.

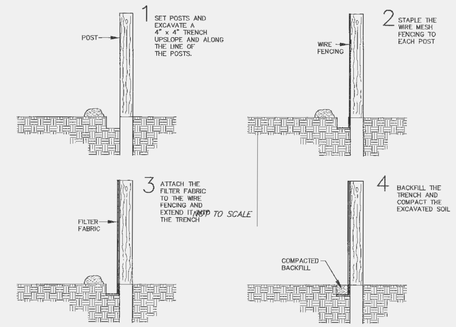

1. FILTER BARRIERS SHALL BE INSPECTED IMMEDIATELY AFTER EACH RAINFALL AND AT LEAST DAILY DURING PROLONGED RAINFALL. ANY REQUIRED REPAIRS SHALL BE MADE IMMEDIATELY.
2. SHOULD THE FABRIC DECOMPOSE OR BECOME INEFFECTIVE PRIOR TO THE END OF THE EXPECTED USABLE LIFE AND THE BARRIER STILL BE NECESSARY, THE FABRIC SHALL BE REPLACED PROMPTLY.
3. SEDIMENT DEPOSITS SHOULD BE REMOVED AFTER EACH STORM EVENT. THEY MUST BE REMOVED WHEN DEPOSITS REACH APPROXIMATELY HALF THE HEIGHT OF THE BARRIER.
4. ANY SEDIMENT DEPOSITS REMAINING IN PLACE AFTER THE SILT FENCE OR FILTER BARRIER IS NO LONGER REQUIRED SHALL BE DRESSED TO CONFORM WITH THE EXISTING GRADE, PREPARED AND SEEDED.

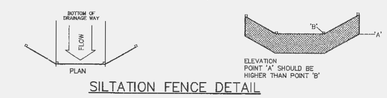

SILTATION FENCE DETAIL

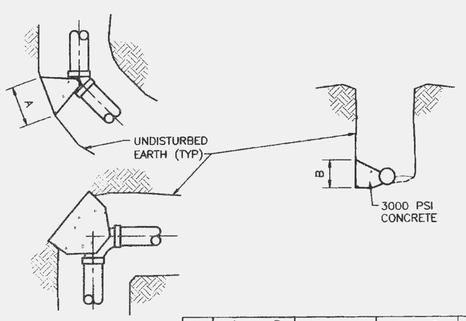

MAIN SIZE	A x B 22½°	A x B 45°	A x B 90°	A x B TEE
2"	.5' x 1'	.5' x 1'	1' x 1'	1' x 1'
4"	1' x 1'	1' x 1'	1.5' x 1'	1' x 1'
6"	1' x 1'	1.5' x 1'	2' x 1'	1.5' x 1'
8"	1' x 1'	2' x 1'	2' x 1'	2' x 1'

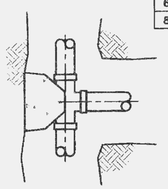

Duckett Creek Sanitary District				
THRUST BLOCK DETAIL AND SIZE SCHEDULE	Dwn By: BSM	App By: KLA	Detail No.	
	Chd By: MDOB	Date: 1-9-01	29	

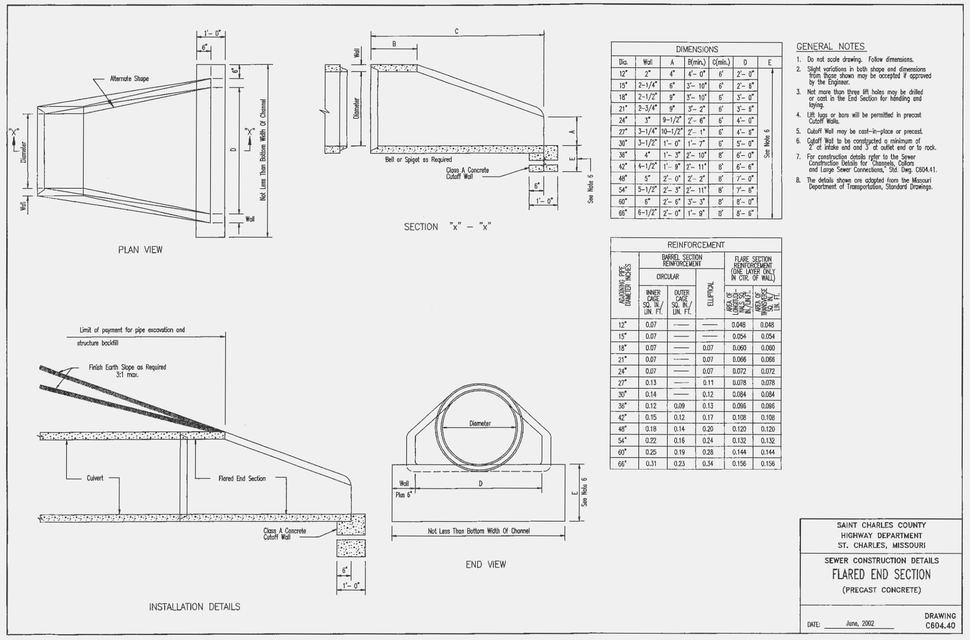

DIMENSIONS						
Dia.	Wall	A	R(min.)	C(min.)	D	E
12"	2"	4"	4'- 0"	6'	2'- 0"	
15"	2-1/4"	6"	3'- 10"	6'	2'- 6"	
18"	2-1/2"	8"	3'- 10"	6'	3'- 0"	
21"	2-3/4"	9"	3'- 2"	6'	3'- 6"	
24"	3"	9-1/2"	2'- 6"	6'	4'- 0"	
27"	3-1/4"	10-1/2"	2'- 1"	6'	4'- 6"	
30"	3-1/2"	1'- 0"	1'- 7"	6'	5'- 0"	
36"	4"	1'- 3"	2'- 10"	8'	6'- 0"	
42"	4-1/2"	1'- 9"	2'- 11"	8'	6'- 6"	
48"	5"	2'- 0"	2'- 2"	8'	7'- 0"	
54"	5-1/2"	2'- 3"	2'- 11"	8'	7'- 6"	
60"	6"	2'- 6"	3'- 3"	8'	8'- 0"	
66"	6-1/2"	2'- 0"	1'- 9"	8'	8'- 6"	

REINFORCEMENT					
ALUMINUM PIPE DIAMETER INCHES	BARREL SECTION REINFORCEMENT CIRCULAR INNER CAGE SQ. IN./LIN. FT.	BARREL SECTION REINFORCEMENT CIRCULAR OUTER CAGE SQ. IN./LIN. FT.	BARREL SECTION REINFORCEMENT ELLIPTICAL	FLARE SECTION REINFORCEMENT (ONE LAYER ONLY IN CRK. OF WALL) HORIZONTAL SQ. IN./LIN. FT.	FLARE SECTION REINFORCEMENT (ONE LAYER ONLY IN CRK. OF WALL) VERTICAL SQ. IN./LIN. FT.
12"	0.07	——	——	0.045	0.045
15"	0.07	——	——	0.054	0.054
18"	0.07	——	0.07	0.060	0.060
21"	0.07	——	0.07	0.066	0.066
24"	0.07	——	0.07	0.072	0.072
27"	0.13	——	0.11	0.078	0.078
30"	0.14	——	0.12	0.084	0.084
36"	0.12	0.09	0.13	0.096	0.096
42"	0.15	0.12	0.17	0.108	0.108
48"	0.18	0.14	0.20	0.120	0.120
54"	0.22	0.16	0.24	0.132	0.132
60"	0.25	0.19	0.28	0.144	0.144
66"	0.31	0.23	0.34	0.156	0.156

GENERAL NOTES

1. Do not scale drawing. Follow dimensions.
2. Slight variations in both shape and dimensions from those shown may be accepted if approved by the Engineer.
3. Not more than three lift holes may be drilled or cast in the End Section for handling and laying.
4. Lift lugs or bars will be permitted in precast Cutoff Walls.
5. Cutoff Wall may be cast-in-place or precast.
6. Cutoff Wall to be constructed a minimum of 2' of intake end and 3' at outlet end or to rock.
7. For construction details refer to the Sewer Construction Details for "Channels, Colors and Large Sewer Connections," Std. Dwg. C604.11.
8. The details shown are adapted from the Missouri Department of Transportation, Standard Drawings.

SAINT CHARLES COUNTY HIGHWAY DEPARTMENT ST. CHARLES, MISSOURI	
SEWER CONSTRUCTION DETAILS FLARED END SECTION (PRECAST CONCRETE)	
DATE: June, 2002	DRAWING C604.40

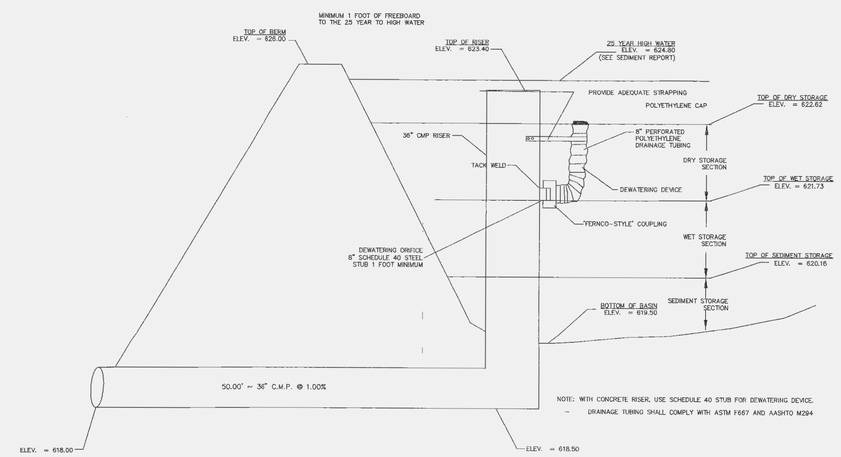

TYPICAL TEMPORARY SEDIMENT BASIN CONTROL STRUCTURE DETAIL
NOT TO SCALE

UNDERGROUND UTILITIES HAVE BEEN PLOTTED FROM AVAILABLE INFORMATION AND THEREFORE THEIR LOCATIONS SHALL BE CONSIDERED APPROXIMATE ONLY. THE VERIFICATION OF THE LOCATION OF ALL UNDERGROUND UTILITIES, EITHER SHOWN OR NOT SHOWN ON THESE PLANS SHALL BE THE RESPONSIBILITY OF THE CONTRACTOR, AND SHALL BE LOCATED PRIOR TO ANY GRADING OR CONSTRUCTION OF THE IMPROVEMENTS.

E:\DWG\A12000TIUS\12453 SE FEISE AND BRYAN\PRELIMINARY\12453pre.dwg, plat grading detail(12453)#6, 4/16/2004 8:22:25 AM, STA 47.DRB