INTEGRAL ROLLED CURB AND CONCRETE PAVEMENT TYPICAL SECTIONS AND DETAILS

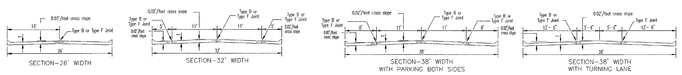

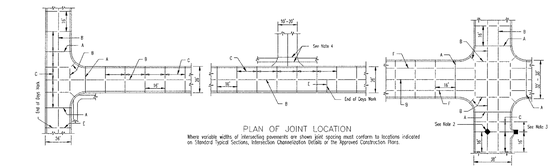

PLAN OF JOINT LOCATION

Where variable widths of interwoving pavements are shown joint spacing must conform to locations indicated on Standard Typical Sections, Intersection Channelization Details or the Approved Construction Plans.

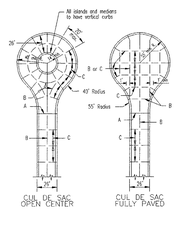

JOINT REQUIREMENTS FOR CONCRETE PAVEMENT			
STREET	JOINT TYPE	JOINT AND BAR REQUIREMENTS	
3 LANE RESIDENTIAL 32'-38' wide pavement 7" thick concrete	Transverse	TYPE C no steel bars	
	Longitudinal	Within a poured rockers: TYPE E 5/8" Φ deformed tie bars 18"lg. @ 30"ctrs.	At the edge between two poured rockers: TYPE B 5/8" Φ deformed tie bars 30"lg. @ 30"ctrs.
	Expansion	TYPE A no steel bars	
RESIDENTIAL 2 LANE 28' wide pavement 6" thick concrete	Transverse	TYPE C no steel bars	
	Longitudinal	Full Width Construction: TYPE E modified with 1/2" Φ deformed tie bars 18"lg. @ 30"ctrs.	Half Width Construction: TYPE B modified with 1/2" Φ deformed tie bars 30"lg. @ 30" ctrs.
	Expansion	TYPE A no steel bars	

NOTE

Joint filler material shall meet ASTM designations as follows:

Bituminous type . . . . . ASTM D-994-53
Non extruding & resilient bituminous type (fiber) . . . ASTM D-1751-62T
Non extruding & resilient non bituminous type (rubber) ASTM D-5249

NOTE

Joint sealant material shall meet ASTM and MO-DOT designations as follows:

ASTM D-3405.....AASHTO M-301 or
ASTM D-1190-74.....AASHTO M-173-84
or latest revisions thereof.

GENERAL NOTES

1. Do not scale drawing. Follow dimensions.
2. All street inlets shall be separated from the pavement and curb by expansion joint material extending completely through curb and deck. Manhole castings within the pavement limits shall be boxed as shown.
3. When a joint falls within 5ft. of, or contacts inlets, manholes, or other structures, shorten one or more panels either side of opening to permit joint to fall on sound structures and at or between corners of rectangular structures.
4. Driveway configurations are shown in the "Entrance Construction Details".
5. Construction joints and tie bars may be omitted when curb is poured monolithic with pavement.
6. Minimum thickness for Pavement is:

   Residential Streets 26' wide — 6"
   Residential Streets 32'-38' wide — 7"
7. For joint and bar requirements refer to the "Pavement Construction Details for "Joints and Curbs." Std. Dwg. C502.03. Note that the width and location may change the type of joint required.
8. Transverse or longitudinal construction joints in slip formed pavements may be made with a groover or tool, if such device has been approved in advance by the Department.
9. The locations of the Type B longitudinal construction joints in the sections may be interchanged for the different widths of construction if approved by the Department.

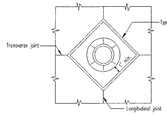

MANHOLE BOXING

SAINT CHARLES COUNTY
HIGHWAY DEPARTMENT
ST. CHARLES, MISSOURI

PAVEMENT CONSTRUCTION DETAILS
INTEGRAL ROLLED CURB AND CONCRETE PAVEMENT TYPICAL SECTIONS AND DETAILS

DATE October, 2002 — DRAWING C502.02

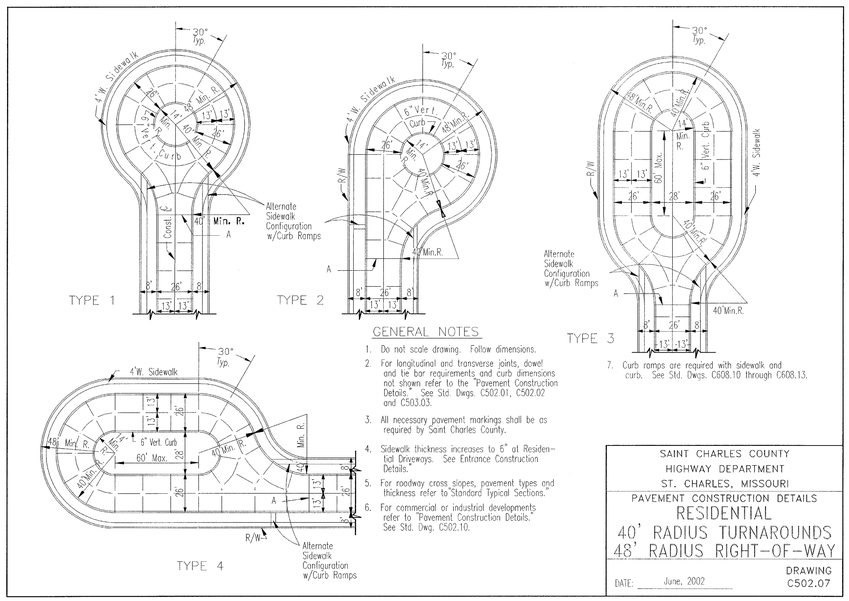

GENERAL NOTES

1. Do not scale drawing. Follow dimensions.
2. For longitudinal and transverse joints, dowel and tie bar requirements and curb dimensions not shown refer to the "Pavement Construction Details." See Std. Dwgs. C502.01, C502.02 and C503.03.
3. All necessary pavement markings shall be as required by Saint Charles County.
4. Sidewalk thickness increases to 6" at Residential Driveways. See Entrance Construction Details.
5. For roadway cross slopes, pavement types and thickness refer to "Standard Typical Sections."
6. For commercial or industrial developments refer to "Pavement Construction Details." See Std. Dwg. C502.10.
7. Curb ramps are required with sidewalk and curb. See Std. Dwgs. C608.10 through C608.13.

SAINT CHARLES COUNTY
HIGHWAY DEPARTMENT
ST. CHARLES, MISSOURI

PAVEMENT CONSTRUCTION DETAILS
RESIDENTIAL
40' RADIUS TURNAROUNDS
48' RADIUS RIGHT-OF-WAY

DATE: June, 2002 — DRAWING C502.07

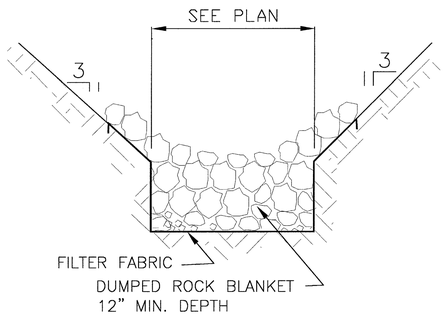

NOTE: DUMPED ROCK BLANKET TO BE A MIN. 12" DIA. QUARRY RUN STONE.

1 ROCK BLANKET DETAIL
SCALE: N.T.S. REF. DWG.

REVISIONS

DATE	DESC
10/8/07	1 CITY COMMENTS
12/3/07	2 CITY COMMENTS
1/10/08	3 CITY COMMENTS

DEVELOPER/OWNER:
THE JONES COMPANY HOMES, L.L.C.
16640 CHESTERFIELD GROVE, SUITE 200
CHESTERFIELD, MO 63005
PHONE: (636) 537-7192

THE PROFESSIONAL WORK SIGNATURE AND PERSONAL SEAL APPEAR HEREON PERTAINS ONLY TO THE ENGINEERING DESIGN OF THE PLANS AND SPECIFICATIONS (PURSUANT TO SECTION 327.411 RSMo). ANY RESPONSIBILITY FOR ALL OTHER PLANS, SPECIFICATIONS, REPORTS, DOCUMENTS OR INSTRUMENTS NOT PREPARED OR SEALED BY THE UNDERSIGNED PROFESSIONAL RELATING TO, OR INTENDED TO BE USED FOR, ANY PART OR PARTS OF THE PROJECT TO WHICH THIS PAGE REFERS.

SEAL: MIKE E. VONDERHEIDE NUMBER E-23077 PROFESSIONAL ENGINEER

PRESTON WOODS - PHASE II
OFFSITE CUL-DE-SAC
PRESTON WOODS LANE
ST. CHARLES, MO. 63366

DETAILS

planning • engineering • surveying • landscape architecture
Cole and ASSOCIATES INCORPORATED
10777 sunset office dr.
saint louis, missouri 63127
p: 314 984 9887 f: 314 984 0587

DESIGNED BY	JKW
DRAWN BY	JKW
CHECKED BY	JFH
DATE	8/29/07
Job Number	07-0178
Sheet Number	C5.1

USER: jwilson TAB: SITE DETAIL SHEET 5.1
DATE: Jan 10, 2008 – 12:23pm
DRAWING: S:\JOBS\Jobs2007\07-0178_C07-0178\dwg\COUNTRYSHIRE CUL-DE-SAC\0_JPLAN_C5.0_DETAILS.dwg