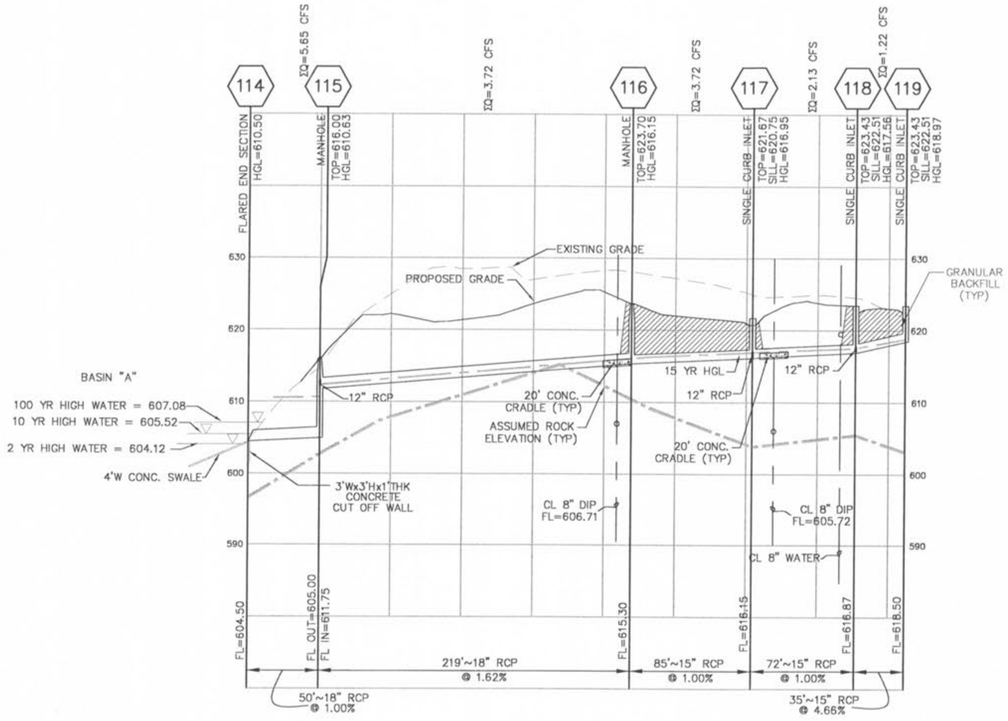

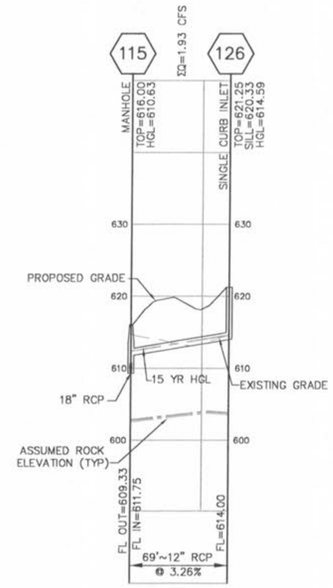

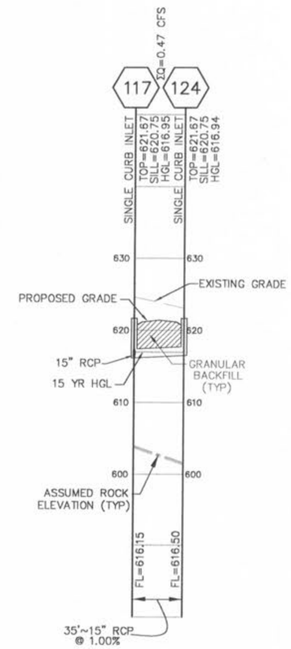

NOTE: CONCRETE PIPE JOINTS SHALL BE MSD TYPE "A" APPROVED COMPRESSION-TYPE JOINTS AND SHALL CONFORM TO THE REQUIREMENTS OF THE SPECIFICATIONS FOR JOINTS FOR CIRCULAR CONCRETE SEWER AND CULVERT PIPE, USING FLEXIBLE, WATERTIGHT, RUBBER-TYPE GASKETS ASTM C443. BAND-TYPE GASKETS DEPENDING ENTIRELY ON CEMENT FOR ADHESION AND RESISTANCE TO DISPLACEMENT DURING JOINTING SHALL NET BE USED.

ALL STORM SEWER PIPES SHALL BE REINFORCED CONCRETE PIPE, CLASS II MINIMUM. ANY CONCRETE PIPE, CONDUIT, OR CULVERT BENEATH A STREET RIGHT-OF-WAY OR WITH REASONABLE PROBABILITY OF BEING SO LOCATED SHALL BE A MINIMUM OF CLASS III, BUT ALSO SHALL ACCOUNT FOR ALL VERTICAL LOADS. IN NO CASE SHALL THE DESIGN PROVIDE FOR LESS THAN HS-20 LOADING PER AASHTO. FOR OTHER LOCATIONS, THE MINIMUM DESIGN LIVE LOAD SHALL BE THE HS-10 LOADING.

STORM SEWER PIPES WHICH CROSS OVER EXISTING OR PROPOSED SANITARY SEWER TRENCHES SHALL BE CRADLED IN CONCRETE THROUGH THE FULL WIDTH OF THE SANITARY SEWER TRENCH. THE TRENCH SHALL BE BACKFILLED AND COMPACTED WITH GRANULAR FILL TO THE BOTTOM OF THE CONCRETE CRADLE.

IF THE STORM AND SANITARY SEWERS ARE PARALLEL AND IN THE SAME TRENCH OR OVER-DIG, THE UPPER PIPE SHALL BE PLACED ON A SHELF AND THE LOWER PIPE SHALL BE BEDDED IN COMPACTED GRANULAR FILL TO THE FLOWLINE OF THE UPPER PIPE.

BRICK SHALL NOT BE USED IN THE CONSTRUCTION OF STORM SEWER STRUCTURES

ALL CONCRETE PIPES WILL BE INSTALLED WITH O-RING RUBBER TYPE GASKETS

CONNECTIONS AT ALL STORM SEWER STRUCTURES TO BE MADE WITH A-LOK JOINT OR EQUAL.

PHASE 2A

PHASE 2B

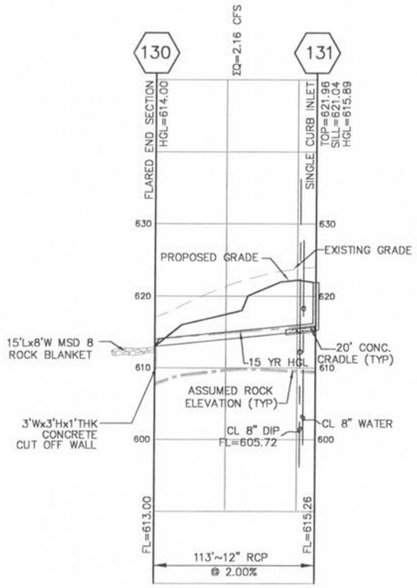

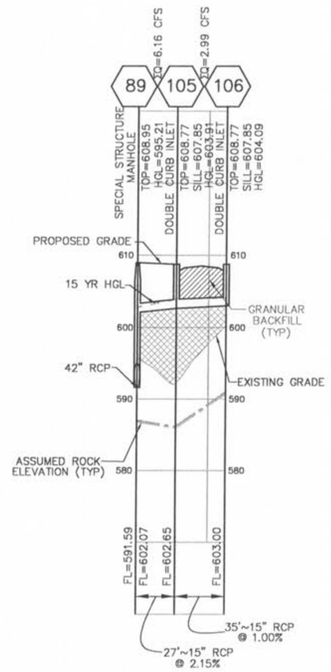

PHASE 2A

PHASE 2B

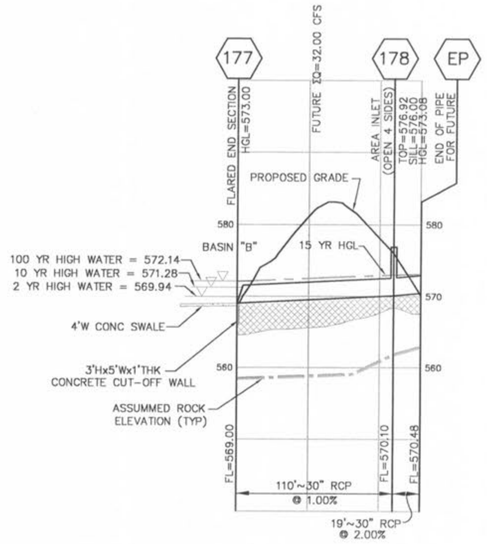

SCALE:
1" = 50' HORIZ.
1" = 10' VERT.

REVISIONS

DATE	DESC.
8/24/07	OWNER/JWSD#2/DUCKETT CREEK
9/7/07	JWSD#2
9/14/07	OWNER COMMENTS
9/14/07	DUCKETT CREEK SANITARY DISTRICT
10/12/07	CITY O'FALLON COMMENTS
10/19/07	CITY O'FALLON COMMENTS
10/23/07	CITY O'FALLON COMMENTS

DEVELOPER/OWNER:
THE JONES COMPANY HOMES, L.L.C.
16640 CHESTERFIELD GROVE, SUITE 200
CHESTERFIELD, MO 63005
PHONE: (636) 537-7192

SEAL:

HIS PROFESSIONAL WHOSE SIGNATURE AND PERSONAL SEAL APPEAR HEREON FOR THE PURPOSE OF ATTESTING TO THE PRELIMINARY STORM SEWER PLANS (PURSUANT TO SECTION 327.411 RSMo.) ANY RESPONSIBILITY FOR ALL OTHER PLANS, DESIGNS, ESTIMATES, REPORTS, OR OTHER DOCUMENTS OR INSTRUMENTS NOT SEALED BY THE UNDERSIGNED IS HEREBY DISCLAIMED. ALL REVISIONS TO BE SEALED FOR ANY PART OR PARTS OF THE PROJECT TO WHICH THIS PLAN REFERS.

JAMES F. HUBBARD
E-29116
REGISTERED PROFESSIONAL ENGINEER
STATE OF MISSOURI

PRESTON WOODS - PHASE II

IMPROVEMENT PLANS

PRESTON WOODS LANE
O'FALLON, MO. 63366

STORM SEWER PROFILES

planning • engineering • surveying • landscape architecture

Cole and ASSOCIATES INCORPORATED
10777 sunset office dr.
saint louis, missouri 63127
p: 314 984 9887 f: 314 984 0587

DESIGNED BY	JKW
DRAWN BY	KDK
CHECKED BY	JFH
DATE	6/14/07
Job Number	07-0041
Sheet Number	C9.0

USER: bwright TAB: C9.0
DATE: Oct 31, 2007 - 12:07pm
DRAWING: S:\JOBS\Jobs2007\07-0041_C07-0041\dwg\IMPROVEMENT PLANS PHASE 2\0_JPLAN_C9.0 STORM PROFILES.dwg