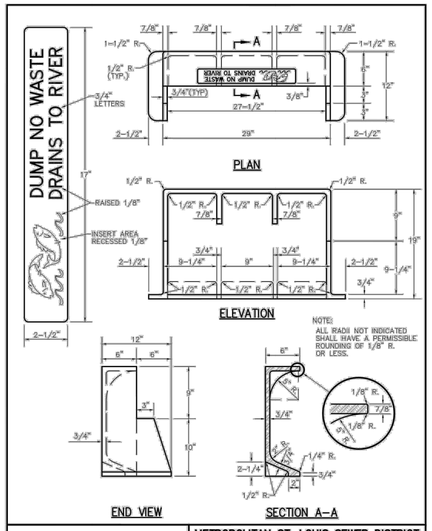

CAST IRON SIDE INTAKE UNIT FOR GRATED INLETS 249 LBS.

METROPOLITAN ST. LOUIS SEWER DISTRICT
Standard Details of Sewer Construction

Dr. RGW/SAM Ch. J.C.K.	2009	SHEET 51

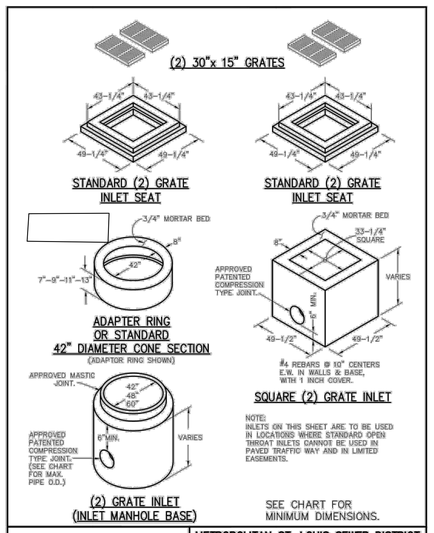

2 GRATE INLETS PRECAST CONCRETE

METROPOLITAN ST. LOUIS SEWER DISTRICT
Standard Details of Sewer Construction

Dr. JLG/SAM Ch. J.C.K.	2009	SHEET 35

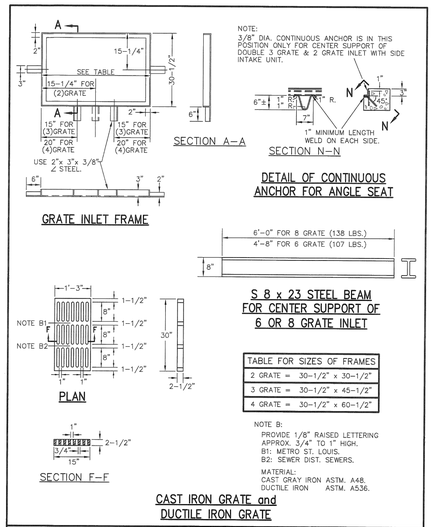

TABLE FOR SIZES OF FRAMES	
2 GRATE =	30–1/2" x 30–1/2"
3 GRATE =	30–1/2" x 45–1/2"
4 GRATE =	30–1/2" x 60–1/2"

DETAILS OF INLET FRAME AND GRATES

METROPOLITAN ST. LOUIS SEWER DISTRICT
Standard Details of Sewer Construction

DR. RGW/SAM Ch. J.C.K.	2009	SHEET 47 (REVISED)

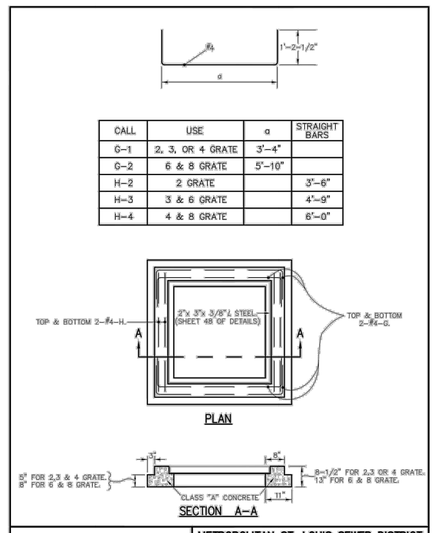

CALL	USE	a	STRAIGHT BARS
G–1	2, 3, OR 4 GRATE	3'–4"	
G–2	6 & 8 GRATE	5'–10"	
H–2	2 GRATE		3'–6"
H–3	3 & 6 GRATE		4'–9"
H–4	4 & 8 GRATE		6'–0"

STEEL REQUIREMENTS FOR GRATE INLET SEAT

METROPOLITAN ST. LOUIS SEWER DISTRICT
Standard Details of Sewer Construction

Dr. WSH/SAM Ch. J.C.K.	2009	SHEET 50

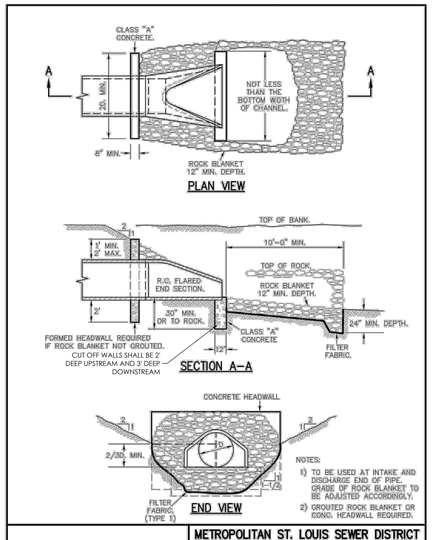

FLARED END SECTION

METROPOLITAN ST. LOUIS SEWER DISTRICT
Standard Details of Sewer Construction

Dr. WSH/SAM Ch. J.C.K.	2009	SHEET 61

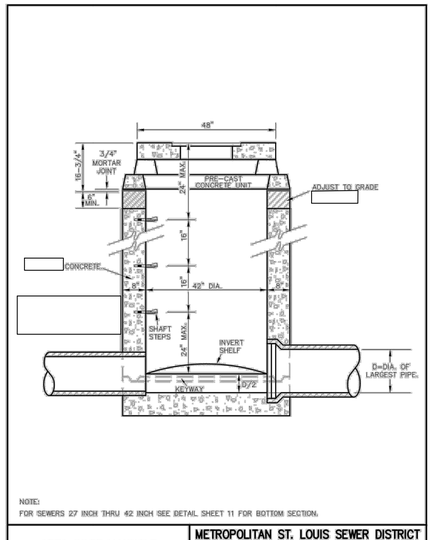

AREA INLET MANHOLE (12" THRU 24")

METROPOLITAN ST. LOUIS SEWER DISTRICT
Standard Details of Sewer Construction

Dr. RGW/SAM Ch. J.C.K.	2009	SHEET 29

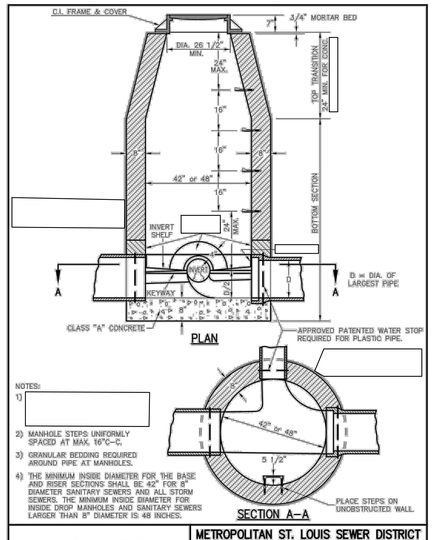

LINE MANHOLE PIPE SEWERS 8"–24" DIA.

METROPOLITAN ST. LOUIS SEWER DISTRICT
Standard Details of Sewer Construction

Dr. WSH/SAM Ch. J.C.K.	2009	SHEET 10 (REV)

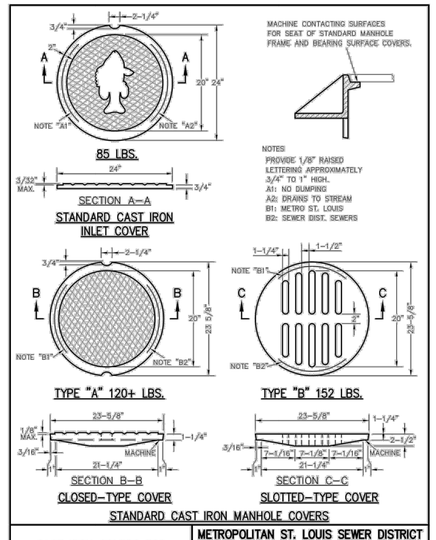

CAST IRON COVERS FOR MANHOLES AND INLETS

METROPOLITAN ST. LOUIS SEWER DISTRICT
Standard Details of Sewer Construction

Dr. RGW/SAM Ch. J.C.K.	2009	SHEET 53

hdesigngroup
architecture + design

5039 S National Avenue | Springfield, MO 65810 | 417.887.6595

OWNER

CITY OF O'FALLON
100 NORTH MAIN STREET
O'FALLON, MO 63366
636.379.5590

PROJECT TEAM

CIVIL ENGINEER
PREMIER DESIGN GROUP
100 MIDLAND PARK DRIVE
WENTZVILLE, MO 63385
314.925.7444

MAINTENANCE CONSULTANT
HDR ENGINEERING, INC.
17725 KATY FREEWAY SUITE 102
HOUSTON, TX 77094
816.360.2700

STRUCTURAL ENGINEER
METTEMEYER ENGINEERING
2225 W CHESTERFIELD BLVD., SUITE 300
SPRINGFIELD, MO 65807
417.890.8002

MEP ENGINEER
HENDERSON ENGINEERS, INC.
8345 LENEXA DR., #300
LENEXA, KS 66214
913.742.5000

REVISIONS

NO.	DESCRIPTION	DATE
1	ADDENDUM #01	10/5/2023

PROJECT NO.: 2207920 DRAWN BY: A. JONES
DATE: 9-15-2023 REVIEWED BY: M. FOGARTY

PROFESSIONAL SEAL

ENGINEERS AUTHENTICATION
The responsibility for professional engineering liability on this project is hereby transferred and assumed by the undersigned. Seal, signature, and date hereunder and the responsibility is disclaimed for all other engineering plans involved in this project and specifically excludes revisions after this date unless reauthenticated.
STEVEN D. MARION P.E.
PROFESSIONAL ENGINEER
PE 2006027195

PROJECT TITLE
O'FALLON PUBLIC WORKS FACILITY

PROJECT ADDRESS:
1101 OLD E TERRA LANE
O'FALLON, MO 63366

STORM SEWER DETAILS

SHEET
C-801

PERMIT SET

\\hdarb-pr\wsf\Civil_3D PROJECTS\2207920_HDG, City of O'fallon MO Public Works\ENGINEERING\PHASE 1 CONSTRUCTION DOCUMENTS\C-801 STORM SEWER DETAILS.dwg