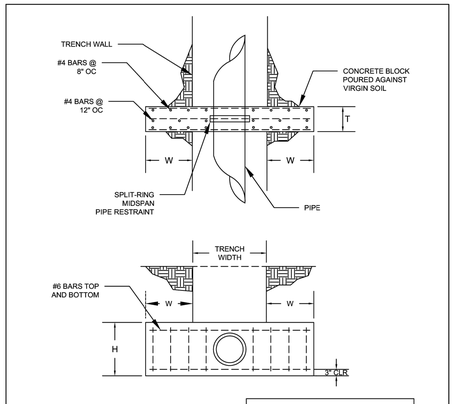

NOTES
1. CROSS BLOCKS SHALL BE PLACED A MINIMUM OF 15' FROM THE CONNECTION POINT AND 5' FROM ANY PIPE BELL.
2. CROSS BLOCKS SHALL BE POURED, SET, AND AT DESIGN STRENGTH PRIOR TO CONNECTIONS BEING MADE.

CROSS BLOCK DIMENSIONS (MEASUREMENTS IN INCHES)

PIPE DIAMETER	W	H	T
6	24	24	24
8	24	24	24
10	30	30	24
12	36	36	24

CROSS BLOCK

Detail D.2

Originally Drafted:	10/23/19
Revision Date:	
Designed By:	KMH
Drafted By:	KMH

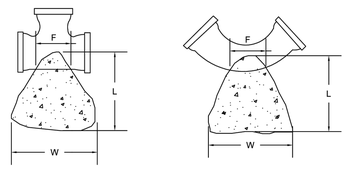

L = LENGTH OF THRUST BLOCK
W = WIDTH OF THRUST BLOCK
H = HEIGHT OF THRUST BLOCK
F = WIDTH OF THRUST BLOCK

THRUST BLOCK DIMENSIONS (MEASUREMENTS IN INCHES)

Pipe Diameter	ALL FITTINGS		TEES & TAPS		90 DEGREE		45 DEGREE		22.5 DEGREE		11.25 DEGREE	
	F	L	W	H	W	H	W	H	W	H	W	H
6	6	16	36	18	48	24	26	24	26	12	13	12
8	8	20	45	24	54	36	45	24	30	18	24	12
10	10	20	56	30	82	36	45	36	36	24	24	18
12	12	24	68	36	100	42	64	36	40	30	24	24

NOTES
1. ALL THRUST BLOCKS ARE TO BE POURED AGAINST VIRGIN SOIL.
2. THRUST BLOCKS FOR FITTING EXCEEDING 12" SHALL BE DESIGNED BY A PROFESSIONAL ENGINEER REGISTERED IN THE STATE OF MISSOURI.

THRUST BLOCKING

Detail D.1

Originally Drafted:	10/18/19
Revision Date:	
Designed By:	KMH
Drafted By:	KMH

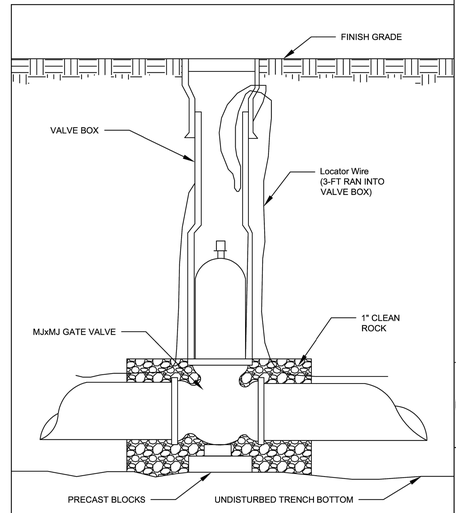

GATE VALVE

Detail C.1

Originally Drafted:	10/18/19
Revision Date:	
Designed By:	KMH
Drafted By:	KMH

Notes:
- All joints shall be restrained mechanical joint fittings as approved by the City
- FH's shall not be located within 6' of a driveway
- Steamer nozzle shall face the street
- Concrete blocks shall be 2"x4"x8" or 4"x8"x16"

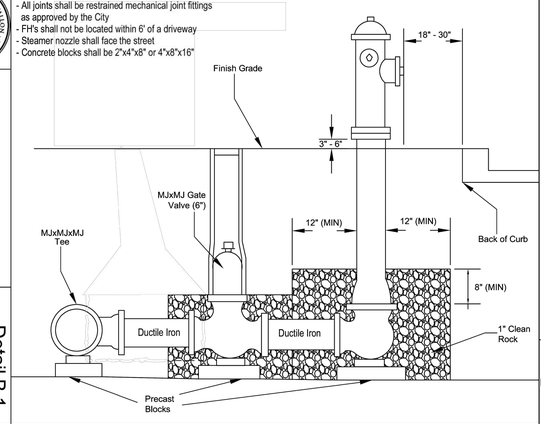

FIRE HYDRANT

Detail B.1

Originally Drafted:	10/17/19
Revision Date:	
Designed By:	KMH
Drafted By:	KMH

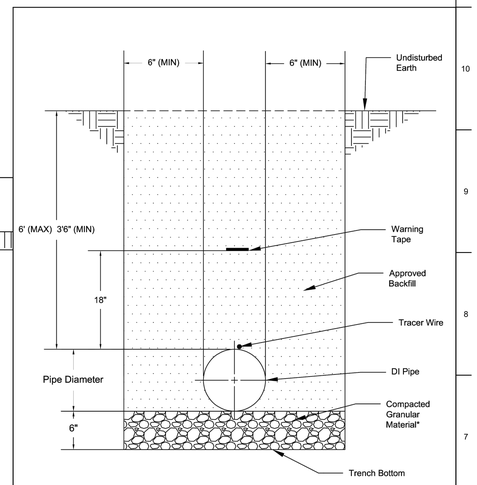

* Compacted Granular Material is required if earth trench bottom contains unsuitable material. The City's Project Engineer will determine the suitability of the trench bottom material

TYPICAL TRENCH - DIP

Detail A.2

Originally Drafted:	10/16/19
Revision Date:	
Designed By:	KMH
Drafted By:	KMH

EXHIBIT B

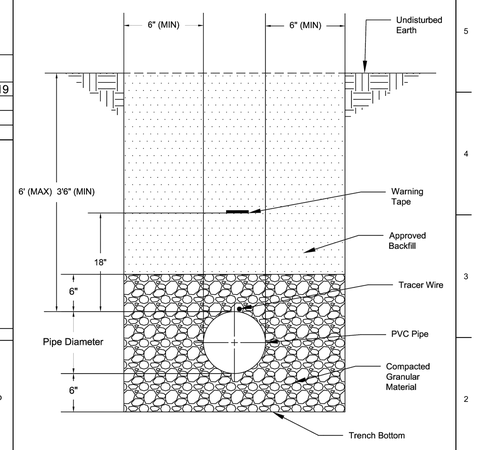

When soil conditions are suitable, an exception can be made on the compacted granular material requirement to use compacted soil backfill in lieu there of. This exception must be approved in writing by the City's Project Engineer.

TYPICAL TRENCH - PVC

Detail A.1

Originally Drafted:	10/16/19
Revision Date:	
Designed By:	KMH
Drafted By:	KMH

hdesigngroup
architecture + design
5039 S National Avenue | Springfield, MO 65810 | 417.887.6595

OWNER

CITY OF O'FALLON
100 NORTH MAIN STREET
O'FALLON, MO 63366
636.379.5590

PROJECT TEAM

CIVIL ENGINEER
PREMIER DESIGN GROUP
100 MIDLAND PARK DRIVE
WENTZVILLE, MO 63385
314.925.7444

MAINTENANCE CONSULTANT
HDR ENGINEERING, INC.
17725 KATY FREEWAY SUITE 102
HOUSTON, TX 77094
816.360.2700

STRUCTURAL ENGINEER
METTEMEYER ENGINEERING
2225 W CHESTERFIELD BLVD., SUITE 300
SPRINGFIELD, MO 65807
417.890.8002

MEP ENGINEER
HENDERSON ENGINEERS, INC.
8345 LENEXA DR., #300
LENEXA, KS 66214
913.742.5000

REVISIONS

NO.	DESCRIPTION	DATE
1	ADDENDUM #01	10/5/2023

PROJECT NO.: 2207920 DRAWN BY: A. JONES
DATE: 9-15-2023 REVIEWED BY: M. FOGARTY

PROFESSIONAL SEAL

STATE OF MISSOURI
STEVEN MARION NUMBER PE2006007195
PROFESSIONAL ENGINEER

ENGINEERS AUTHENTICATION
The responsibility for professional engineering liability on this project is hereby limited to the set of plans authenticated by the seal, signature, and date hereunder attached. Responsibility is disclaimed for all other engineering plans in this project unless specifically excludes revisions after this date unless signed, sealed, and dated.
STEVEN D. MARRON P.E.
PROFESSIONAL ENGINEER
PE 2006007195

PROJECT TITLE
O'FALLON PUBLIC WORKS FACILITY

PROJECT ADDRESS:
1101 OLD E TERRA LANE
O'FALLON, MO 63366

WATER MAIN DETAILS

SHEET
C-803

PERMIT SET

\\Vault.pt\vault\CIVIL 3D PROJECTS\2022\2207920_HDG_City of O'fallon MO Public Works\ENGINEERING\PHASE 1 CONSTRUCTION DOCUMENTS\C-702 WATER MAIN DETAILS.dwg