• ALL PIPE CONNECTIONS SHALL HAVE A BOOTED CONNECTOR.

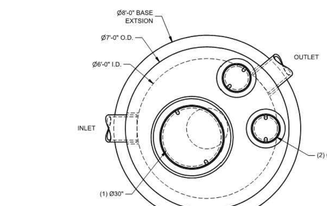

PLAN VIEW

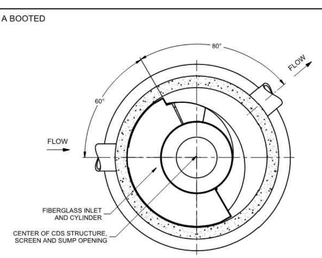

SECTION A-A

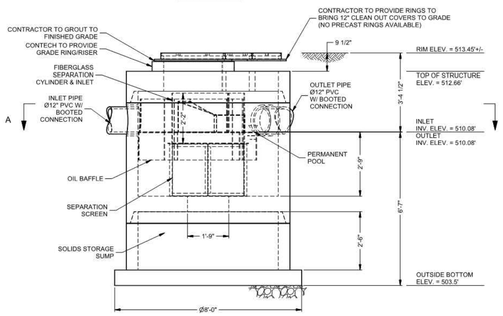

ELEVATION VIEW

MATERIAL LIST - PROVIDED BY CONTECH

COUNT	DESCRIPTION	INSTALLED BY
1	FIBERGLASS INLET AND CYLINDER	CONTECH
1	2400 micron, 3.04' O.D. x 2.25' SEP. SCREEN	CONTECH
1	SEALANT FOR JOINTS	CONTRACTOR
1 PLC	GRADE RINGS/RISERS	CONTRACTOR
2	Ø12" x 4' EJ #41610201, OR EQUIVALENT	CONTRACTOR
1	Ø30" x 4' EJ #41600484, OR EQUIVALENT	CONTRACTOR

GENERAL NOTES
1. CONTECH TO PROVIDE ALL MATERIALS UNLESS NOTED OTHERWISE.
2. FOR FABRICATION DRAWINGS WITH DETAILED STRUCTURE DIMENSIONS AND WEIGHT, PLEASE CONTACT YOUR CONTECH ENGINEERED SOLUTIONS LLC REPRESENTATIVE. www.ContechES.com
3. CDS WATER QUALITY STRUCTURE SHALL BE IN ACCORDANCE WITH ALL DESIGN DATA AND INFORMATION CONTAINED IN THIS DRAWING.
4. STRUCTURE SHALL MEET AASHTO HS-20 LOAD RATING. ASSUMING EARTH COVER OF 0' - 5', AND GROUNDWATER ELEVATION AT , OR BELOW, THE OUTLET PIPE INVERT ELEVATION. ENGINEER OF RECORD TO CONFIRM ACTUAL GROUNDWATER ELEVATION. CASTINGS SHALL MEET AASHTO M306 AND BE CAST WITH THE CONTECH LOGO.
5. IF REQUIRED, PVC HYDRAULIC SHEAR PLATE IS PLACED ON SHELF AT BOTTOM OF SCREEN CYLINDER. REMOVE AND REPLACE AS NECESSARY DURING MAINTENANCE CLEANING.
6. CDS STRUCTURE SHALL BE PRECAST CONCRETE CONFORMING TO ASTM C-478 AND AASHTO LOAD FACTOR DESIGN METHOD.

INSTALLATION NOTES
A. ANY SUB-BASE, BACKFILL DEPTH, AND/OR ANTI-FLOTATION PROVISIONS ARE SITE-SPECIFIC DESIGN CONSIDERATIONS AND SHALL BE SPECIFIED BY ENGINEER OF RECORD.
B. CONTRACTOR TO PROVIDE EQUIPMENT WITH SUFFICIENT LIFTING AND REACH CAPACITY TO LIFT AND SET THE CDS MANHOLE STRUCTURE.
C. CONTRACTOR TO INSTALL JOINT SEALANT BETWEEN ALL STRUCTURE SECTIONS AND ASSEMBLE STRUCTURE.
D. CONTRACTOR TO PROVIDE, INSTALL, AND GROUT PIPES. MATCH PIPE INVERTS WITH ELEVATIONS SHOWN. ALL PIPE CENTERLINES TO MATCH PIPE OPENING CENTERLINES.
E. CONTRACTOR TO TAKE APPROPRIATE MEASURES TO ASSURE UNIT IS WATER TIGHT. HOLDING WATER TO FLOWLINE INVERT MINIMUM. IT IS SUGGESTED THAT ALL JOINTS BELOW PIPE INVERTS ARE GROUTED.

STRUCTURE WEIGHT
APPROXIMATE HEAVIEST PICK = 11000 LBS
STRUCTURE IS DELIVERED IN 3 PIECES

MAX FOOTPRINT - 8'

CONTECH
CONTRACT
DRAWING

KIEN-MSD
3020-6-FGS
1185/KIEN10

NO.	DATE	REVISION DESCRIPTION	BY

CDS3020-6-C- 523975-10
QUIKTRIP #0643S
O'FALLON, MO
for SYSTEM: #1-5

CONTECH ENGINEERED SOLUTIONS LLC
9025 Centre Pointe Drive, Suite 400, West Chester, OH 45069
800-338-1122 www.ContechES.com

DATE: 7/8/15 | SCALE:
DESIGNER: JHR | DRAWN: ASB
CHECKED: N/A | APPROVED: JHR
PROJECT NUMBER: 523975
SHEET: 1 OF 1

© Contech Engineered Solutions LLC www.conteches.com

• ALL PIPE CONNECTIONS SHALL HAVE A BOOTED CONNECTOR.

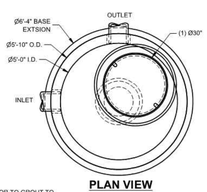

PLAN VIEW

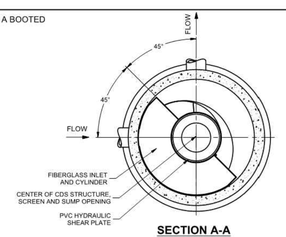

SECTION A-A

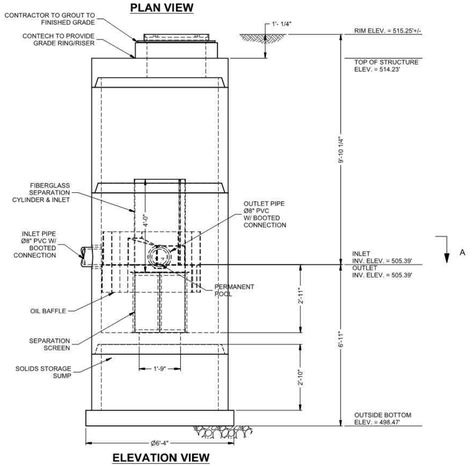

ELEVATION VIEW

MATERIAL LIST - PROVIDED BY CONTECH

COUNT	DESCRIPTION	INSTALLED BY
1	FIBERGLASS INLET AND CYLINDER	CONTECH
1	2400 micron, 2.13' O.D. x 2.58' SEP. SCREEN	CONTECH
1	3/16 INCH PVC HYDRAULIC SHEAR PLATE	CONTECH
1	SEALANT FOR JOINTS	CONTRACTOR
1 PLC	GRADE RINGS/RISERS	CONTRACTOR
1	Ø30" x 4' EJ #41600484, OR EQUIVALENT	CONTRACTOR

GENERAL NOTES
1. CONTECH TO PROVIDE ALL MATERIALS UNLESS NOTED OTHERWISE.
2. FOR FABRICATION DRAWINGS WITH DETAILED STRUCTURE DIMENSIONS AND WEIGHT, PLEASE CONTACT YOUR CONTECH ENGINEERED SOLUTIONS LLC REPRESENTATIVE. www.ContechES.com
3. CDS WATER QUALITY STRUCTURE SHALL BE IN ACCORDANCE WITH ALL DESIGN DATA AND INFORMATION CONTAINED IN THIS DRAWING.
4. STRUCTURE SHALL MEET AASHTO HS-20 LOAD RATING. ASSUMING EARTH COVER OF 2' - 5', AND GROUNDWATER ELEVATION AT , OR BELOW, THE OUTLET PIPE INVERT ELEVATION. ENGINEER OF RECORD TO CONFIRM ACTUAL GROUNDWATER ELEVATION. CASTINGS SHALL MEET AASHTO M306 AND BE CAST WITH THE CONTECH LOGO.
5. IF REQUIRED, PVC HYDRAULIC SHEAR PLATE IS PLACED ON SHELF AT BOTTOM OF SCREEN CYLINDER. REMOVE AND REPLACE AS NECESSARY DURING MAINTENANCE CLEANING.
6. CDS STRUCTURE SHALL BE PRECAST CONCRETE CONFORMING TO ASTM C-478 AND AASHTO LOAD FACTOR DESIGN METHOD.

INSTALLATION NOTES
A. ANY SUB-BASE, BACKFILL DEPTH, AND/OR ANTI-FLOTATION PROVISIONS ARE SITE-SPECIFIC DESIGN CONSIDERATIONS AND SHALL BE SPECIFIED BY ENGINEER OF RECORD.
B. CONTRACTOR TO PROVIDE EQUIPMENT WITH SUFFICIENT LIFTING AND REACH CAPACITY TO LIFT AND SET THE CDS MANHOLE STRUCTURE.
C. CONTRACTOR TO INSTALL JOINT SEALANT BETWEEN ALL STRUCTURE SECTIONS AND ASSEMBLE STRUCTURE.
D. CONTRACTOR TO PROVIDE, INSTALL, AND GROUT PIPES. MATCH PIPE INVERTS WITH ELEVATIONS SHOWN. ALL PIPE CENTERLINES TO MATCH PIPE OPENING CENTERLINES.
E. CONTRACTOR TO TAKE APPROPRIATE MEASURES TO ASSURE UNIT IS WATER TIGHT. HOLDING WATER TO FLOWLINE INVERT MINIMUM. IT IS SUGGESTED THAT ALL JOINTS BELOW PIPE INVERTS ARE GROUTED.

STRUCTURE WEIGHT
APPROXIMATE HEAVIEST PICK = 9000 LBS
STRUCTURE IS DELIVERED IN 3 PIECES

MAX FOOTPRINT - 6.33'

CONTECH
CONTRACT
DRAWING

KIEN-MSD
2020-5-FGS
1185/KIEN10

NO.	DATE	REVISION DESCRIPTION	BY

CDS2025-5-C- 523975-20
QUIKTRIP #0643S
O'FALLON, MO
for SYSTEM: #2-8

CONTECH ENGINEERED SOLUTIONS LLC
9025 Centre Pointe Drive, Suite 400, West Chester, OH 45069
800-338-1122 www.ContechES.com

DATE: 7/8/15 | SCALE:
DESIGNER: JHR | DRAWN: ASB
CHECKED: N/A | APPROVED: JHR
PROJECT NUMBER: 523975
SHEET: 1 OF 1

© Contech Engineered Solutions LLC www.conteches.com

Project Name: QuikTrip #0643S
Location: St. Louis, MO
Project No.: 523975
Structure No.: #1-5
Prepared For: Keith Fryer
Prepared By: JHR

Drainage Area	0.79	acre	Impervious Area	0.76	acre
	34,413	ft²		33,105	ft²
	0.79	acre		0.76	acre
	0.00123438	m²		0.0011875	m²
% Impervious	96.2%		% Impervious Over-ride		
P	1.14	in			
Rv	0.916	volumetric runoff coefficient			
Qa	1.04	watershed inches			
WQV	2,994.0	ft3			
	0.069	acre-ft			
CN	99.2				
Tc	6	min			
	0.10	hr			
Rainfall Type	II				
Potential Abstraction, "S"	0.08	inches			
Initial Abstraction, "Ia"	0.02	inches			
Treatment System	CDS				
qu	1010.41				
WQF	1.30	cfs			
CDS Model	CDS3020				
MSD Approved Treatment Flow (cfs)	1.40	cfs			

Project Name: QuikTrip #0643S
Location: St. Louis, MO
Project No.: 523975
Structure No.: #2-8
Prepared For: Keith Fryer
Prepared By: JHR

Drainage Area	0.68	acre	Impervious Area	0.64	acre
	29,621	ft²		27,878	ft²
	0.68	acre		0.64	acre
	0.0010625	m²		0.001	m²
% Impervious	94.1%		% Impervious Over-ride		
P	1.14	in			
Rv	0.897	volumetric runoff coefficient			
Qa	1.02	watershed inches			
WQV	2,524.3	ft3			
	0.058	acre-ft			
CN	99.0				
Tc	6	min			
	0.10	hr			
Rainfall Type	II				
Potential Abstraction, "S"	0.11	inches			
Initial Abstraction, "Ia"	0.02	inches			
Treatment System	CDS				
qu	1010.41				
WQF	1.19	cfs			
CDS Model	CDS2025				
MSD Approved Treatment Flow (cfs)	1.12	cfs			

CONTECH Construction Products Inc.

CDS® Inspection and Maintenance Guide

CDS Model	Diameter		Distance from Water Surface to Top of Sediment Pile		Sediment Storage Capacity	
	ft	m	ft	m	yd³	m³
CDS2015-4	4	1.2	5.0	0.9	0.5	0.4
CDS2015-5	5	1.5	5.0	0.9	1.0	1.0
CDS2020	5	1.5	8.5	1.1	1.0	1.0
CDS3020	6	1.8	4.0	1.2	2.1	1.6
CDS4020	8	1.8	4.0	1.0	2.1	1.6
CDS4030	8	1.8	5.0	1.5	2.1	1.6
CDS5030	10	1.4	7.0	1.4	3.4	4.3
CDS6030	12	2.4	5.7	1.7	3.5	4.3
CDS8030	15	4.6	6.4	1.9	3.6	4.3

Table 1: CDS Maintenance Indication and Sediment Storage Capacities

CONTECH
ARCHITECTURAL PRODUCTS
800.338.1122
www.conteches.com

Maintenance

The CDS system should be inspected at regular intervals and maintained when necessary to ensure optimum performance. The rate at which the system collects pollutants will depend more on site conditions than on the size of the system. Sediment unstable soils or heavy winter sanding will cause the grit chamber to fill more quickly but regular sweeping of paved surfaces will slow accumulation.

Inspection

Inspection is the key to effective maintenance and is easily performed. Pollutant transport and deposition may vary from year to year and regular inspections will help ensure that the system functions at its intended capacity. At a minimum, inspections should be performed twice per year (e.g. spring and fall) however more frequent inspections may be necessary in climates where winter sanding operations may lead to rapid accumulations, or in equipment washdown areas. Installations should also be inspected more frequently where excessive amounts of trash are expected.

The visual inspection should ascertain that the system components are in working order and that there are no blockages or obstructions in the inlet and separation screen. The inspection should also quantify the accumulation of sediment, oil, floating debris and trash in the system. Measuring pollutant accumulation can be done with a calibrated dipstick, tape measure or other measuring instrument. If absorbent material is used for enhanced removal of hydrocarbons, the level of discoloration of the sorbent material should also be identified during inspection. It is useful and often required as part of an operating permit to keep a record of each inspection. A simple form for doing so is provided.

Access to the CDS unit is typically achieved through two manhole access covers. One opening allows for inspection and cleanout of the separation chamber (cylinder and screen) and isolated sump. The second opening allows for inspection of sediment captured and retained outside the screen. For deep units, a single manhole access point would allows both sump cleanout and access outside the screen.

The CDS system should be cleaned when the level of sediment has reached 75% of capacity in the isolated sump or when an appreciable level of hydrocarbons and trash has accumulated. If absorbent material is used, it should be replaced when significant discoloration has occurred. Performance will not be compromised if the CDS system is cleaned before maintenance is recommended that the system be cleaned prior to that for easier removal of sediment. The level of sediment is easily determined by measuring from inlet grade down to the top of the sediment pile. To avoid underestimating the level of sediment in the chamber, the measuring device must be lowered to the top of the sediment pile carefully. Particles at the top of the pile are the lightest and most easily displaced by flow while consolidated particles toward the bottom of the pile. Once this measurement is recorded, it should be compared to the as-built drawing for the unit to determine weather the height of the sediment pile off the bottom of the sump floor exceeds 75% of the total height of isolated sump.

Cleaning

Cleaning of a CDS systems should be done during dry weather conditions when no flow is entering the system. The use of a vacuum truck is generally the most effective and convenient method of removing pollutants from the CDS unit. Simply remove the manhole covers and insert the vacuum hose into the sump. The system should be completely drained down and the sump fully evacuated of sediment. The area outside the screen should also be cleaned out if pollutant build-up exists in this area.

In installations where the risk of petroleum spills is small, liquid contaminants may not accumulate as quickly as sediment. However, the system should be cleaned out immediately in the event of an oil or gasoline spill should be cleared out immediately. Motor oil and other hydrocarbons that accumulate on a more routine basis should be removed when an appreciable layer has accumulated. In high hydrocarbon areas it may be preferable to use absorbent pads since they are usually less expensive to dispose than the oil/water emulsion that may be created by vacuuming the oily layer. Trash and debris can be netted out to separate it from the other pollutants. The screen should be power washed to ensure it is free of trash and debris.

Manhole covers should be securely seated following cleaning activities to prevent leakage of runoff into the system from above and also to ensure that proper safety precautions have been followed. Confined space entry procedures must be followed if physical access is required. Disposal of all material removed from the CDS system should be done in accordance with local regulations. In many jurisdictions, disposal of the sediments may be handled in the same manner as the disposal of sediments removed from catch basins or deep sump manholes.

CDS Inspection & Maintenance Log

CDS Model: _____ Location: _____

Date	Water depth to sediment[1]	Floatables Layer Thickness[2]	Describe Maintenance Performed	Maintenance Personnel	Comments

1. The water depth to sediment is determined by taking two measurements with a shake rod, one measurement from the manhole/opening to the top of the sediment pile and the other from the manhole/opening to the water surface. If the difference between these measurements is less than 75% of the total height of isolated sump, then the CDS should be cleaned. When measuring the volume of sediment in the chamber, the measuring device must be carefully lowered to the top of the sediment pile.
2. For optimum performance, the system should be cleaned out when the floating hydrocarbon layer accumulates to an appreciable thickness. In the event of an oil spill, the system should be cleaned immediately.

STATE OF MISSOURI
MICHAEL JAMES VELLOFF
NO. E-2000161862
PROFESSIONAL ENGINEER

PROJECT NO.: 141029

NAME: MICHAEL J. VELLOFF
LICENSE NUMBER: E-2000161862
DISCIPLINE: CIVIL
CORPORATION AUTHORITY NUMBER: 001194

THE SEAL OF MICHAEL J. VELLOFF ON THIS DRAWING APPLIES ONLY TO THE CIVIL/SITE ENGINEERING SHOWN. IT DOES NOT APPLY, NOR IS ANY RESPONSIBILITY TAKEN FOR ENVIRONMENTAL, GEOTECHNICAL (INCLUDING BUT NOT LIMITED TO SLOPE STABILITY), STRUCTURAL, HVAC, PLUMBING, ELECTRICAL, FIRE PROTECTION, TRAFFIC ENGINEERING, SURVEYING (BOUNDARY AND TOPOGRAPHIC), OR ARCHITECTURAL (BUILDING OR LANDSCAPE).

QuikTrip No. 0643S

8601 Mexico Road
O'Fallon, Missouri 63366

QT

© COPYRIGHT QUIKTRIP CORPORATION 2011 ANY UNAUTHORIZED USE, REPRODUCTION, PUBLICATION, DISTRIBUTION, OR SALE IN WHOLE OR IN PART, IS STRICTLY FORBIDDEN.

PROTOTYPE: P-83
DIVISION: 06
VERSION: 001
DESIGNED BY: RKF
DRAWN BY: RKF
REVIEWED BY: MJV

REV	DATE	DESCRIPTION
	12-21-15	CONSTRUCTION SET

ORIGINAL ISSUE DATE: 07-24-15

SHEET TITLE:
WATER QUALITY DETAILS

SHEET NUMBER:
C301

FILE LOCATION:K:\141029 - QuikTrip #0643 Mexico and Highway K\Civil\06-0643 Civil.dwg TAB NAME:C301 HDS Unit Details USER:rkfryer SAVED:12/15/2015 2:57 PM PLOTTED:12/16/2015 8:10 AM