1. 4" THICK X 4000 P.S.I. CONCRETE LADDER PAD W/6"X6" 10 GA. W.W.F. PLACED LEVEL, MID-DEPTH (TYPICAL)
2. 4" THICK X 4000 P.S.I. CONCRETE SIGN PAD W/6"X6" 10 GA. W.W.F. PLACED LEVEL, MID-DEPTH (TYPICAL)
3. CAULK CONSTRUCTION JOINT BETWEEN SIGN AND LADDER PADS.
4. FOR QT SIGN PAD PLACEMENT, RE: SITE PLAN FOR SITE SPECIFIC SIGNAGE.

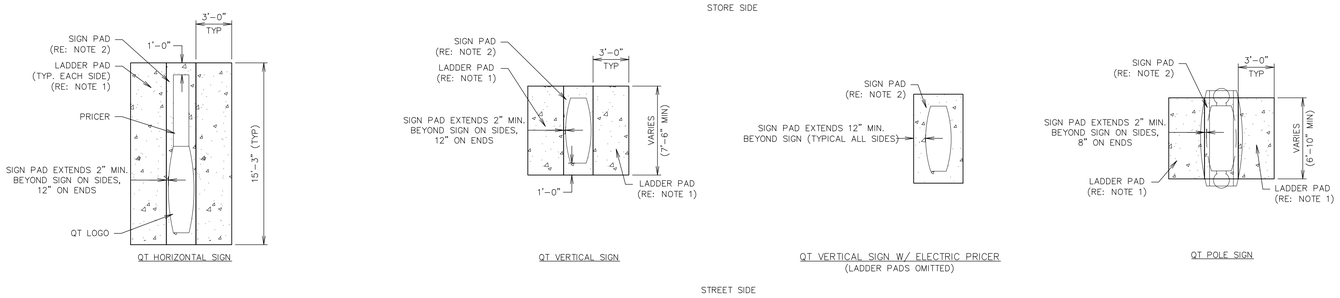

L1 GEN III SIGN PAD DETAIL

NTS | SN: SD015A004

MODEL: BELSON OUTDOORS MODEL: H36-7-G-IG (PROVIDED BY CONTRACTOR)

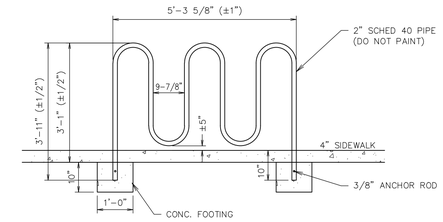

L11 GEN III BIKE RIBBON RACK DETAIL

NTS | SN: SD022A005

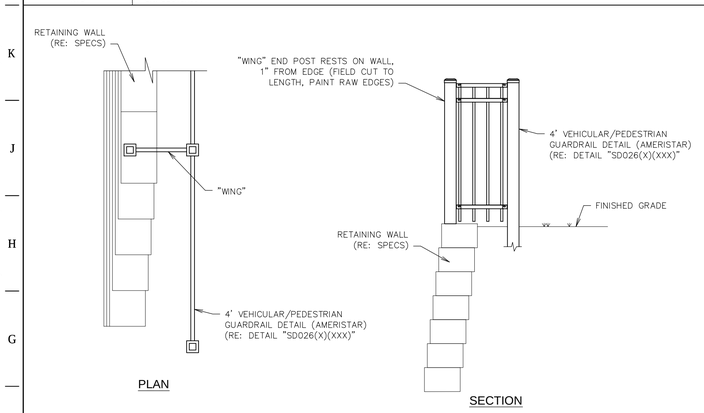

F1 PEDESTRIAN WING GUARD DETAIL

NTS | SN: SD028A001

1. MODEL: AMERISTAR MONTAGE II w/ 4" 11 GA. POSTS
2. PAINT COLOR: BRONZE
3. POSTS INSTALLED INTO SOIL CAPABLE OF SUSTAINING AN ALLOWABLE LATERAL BEARING PRESSURE OF 200 PSF/FT. DEPTH

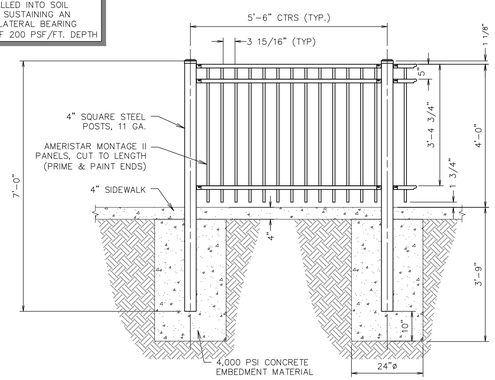

F6 4' VEHICULAR/PEDESTRIAN GUARD RAIL (AMERISTAR)

NTS | SN: SD026A001

- DO NOT STEP THE GRADES TO MATCH THE WALL STEPS.
- ADJUST WALL STEPS TO ALLOW SMOOTH GRADE TRANSITIONS.
- SMOOTH GRADES ARE REQUIRED FOR PROPER GUARDRAIL INSTALLATION.
- EXPOSED WALL BLOCK SHOULD BE FACED ON BOTH SIDES.

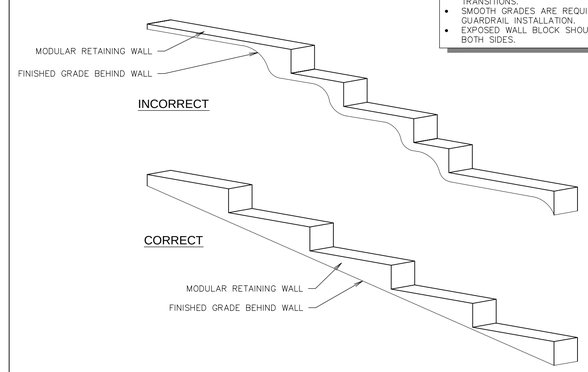

F11 MODULAR BLOCK WALL GRADING DETAIL

NTS | SN: SD027A001

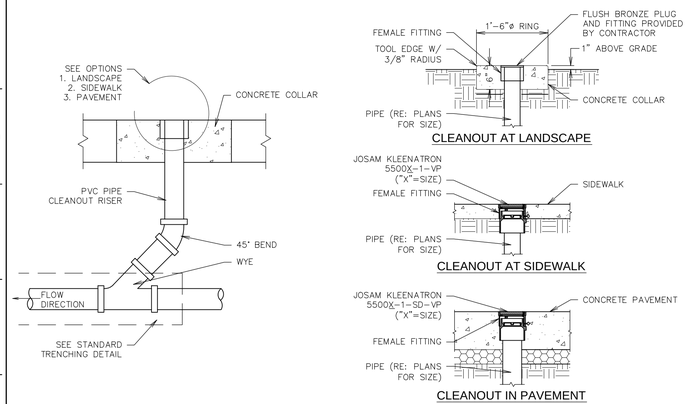

A1 CLEANOUT SECTION DETAIL

NTS | SN: SD016A006

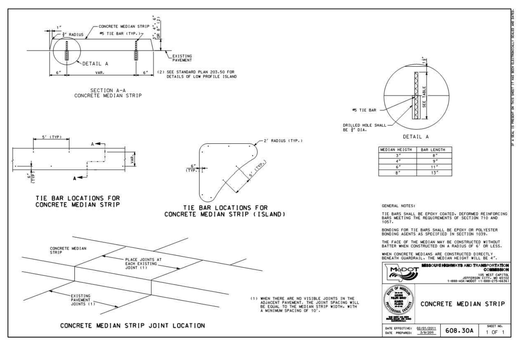

A6 MODOT DOWEL-ON MEDIAN

NTS | SN: SD022A005

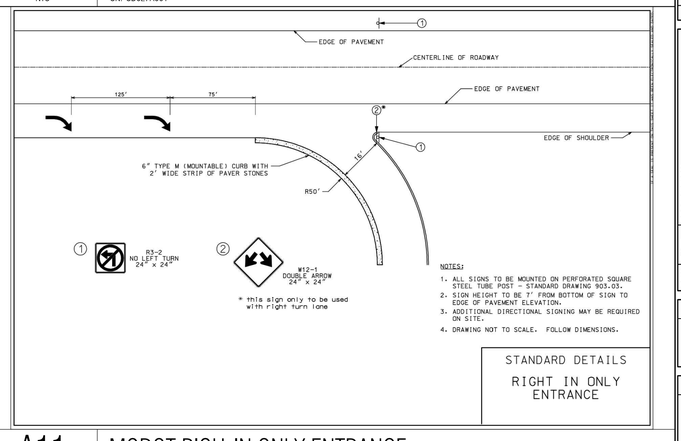

A11 MODOT RIGH-IN ONLY ENTRANCE

NTS | SN: SD022A005

STATE OF MISSOURI — MICHAEL JAMES VELLOFF NO. E-2000161862 — PROFESSIONAL ENGINEER

PROJECT NO.: 141029

NAME: MICHAEL J. VELLOFF
LICENSE NUMBER: E-2000161862
DISCIPLINE: CIVIL
CORPORATION AUTHORITY NUMBER: 001194

THE SEAL OF MICHAEL J. VELLOFF ON THIS DRAWING APPLIES ONLY TO THE CIVIL/SITE ENGINEERING SHOWN. IT DOES NOT APPLY, NOR IS ANY RESPONSIBILITY TAKEN FOR ENVIRONMENTAL, GEOTECHNICAL (INCLUDING BUT NOT LIMITED TO SLOPE STABILITY), STRUCTURAL, HVAC, PLUMBING, ELECTRICAL, FIRE PROTECTION, TRAFFIC ENGINEERING, SURVEYING (BOUNDARY AND TOPOGRAPHIC), OR ARCHITECTURAL (BUILDING OR LANDSCAPE).

QuikTrip No. 0643S

8601 Mexico Road
O'Fallon, Missouri 63366

© COPYRIGHT QUIKTRIP CORPORATION 2011 ANY UNAUTHORIZED USE, REPRODUCTION, PUBLICATION, DISTRIBUTION, OR SALE IN WHOLE OR IN PART, IS STRICTLY FORBIDDEN.

PROTOTYPE: P-83
DIVISION: 06
VERSION: 001
DESIGNED BY: RKF
DRAWN BY: RKF
REVIEWED BY: MJV

REV	DATE	DESCRIPTION
	12-21-15	CONSTRUCTION SET

ORIGINAL ISSUE DATE: 07-24-15

SHEET TITLE: MISC. SITE DETAILS

SHEET NUMBER: C500

FILE LOCATION:K:\141029 - QuikTrip #0643 Mexico and Highway K\Civil\06-0643 DETAILS MISC. SITE.dwg TAB NAME:SITE DETAIL SHEET 1 USER:rkfryer SAVED:10/14/2015 6:50 AM PLOTTED:12/16/2015 8:11 AM