DRIPLINE TO BE 3" TO 4" BELOW GRADE

INSTALL TLAVRV AIR RELIEF VALVE AT OPPOSITE END OF FLUSH VALVE

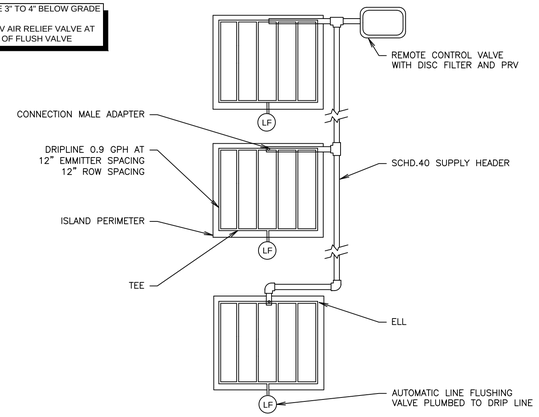

L1 DRIP IRRIGATION INSTALLATION DETAIL

NTS | SN: ID001A001

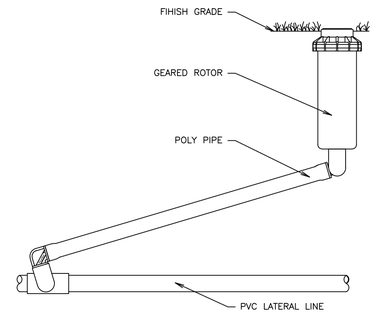

L6 ROTOR INSTALLATION DETAIL

NTS | SN: ID002A001

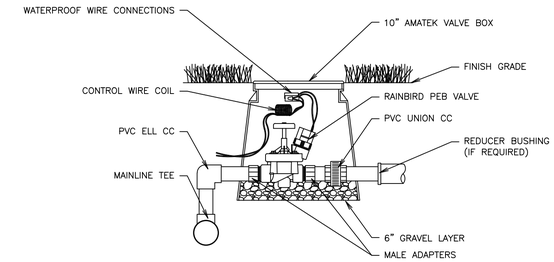

L11 ZONE VALVE ASSY. INSTALLATION DETAIL

NTS | SN: ID003A001

INSTALL PER RAINBIRD SPECIFICATIONS

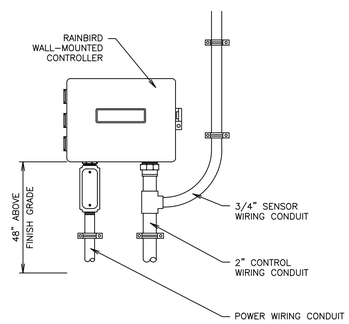

F1 WALL-MOUNT CONTROLLER INSTALLATION DETAIL

NTS | SN: ID004A001

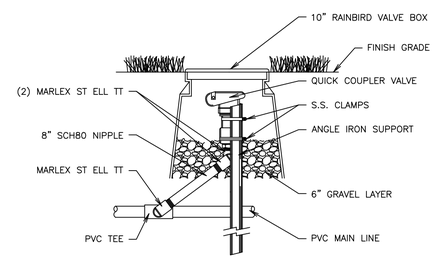

F6 QUICK COUPLING VALVE

NTS | SN: ID005A001

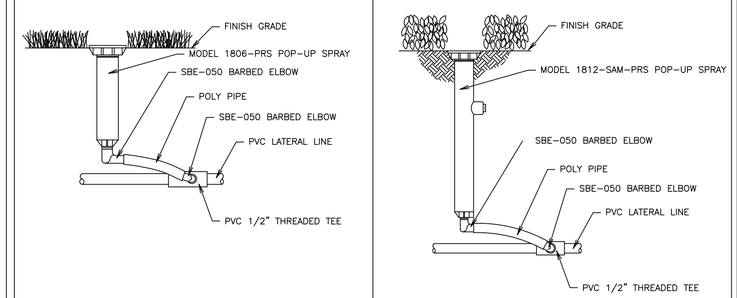

F11 6" POP-UP TURF / 12" SHRUB INSTALLATION DETAIL

NTS | SN: ID006A001

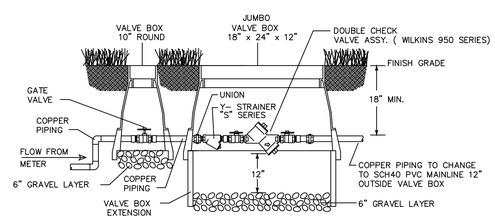

A1 BACKFLOW INSTALLATION DETAIL

NTS | SN: ID006A001

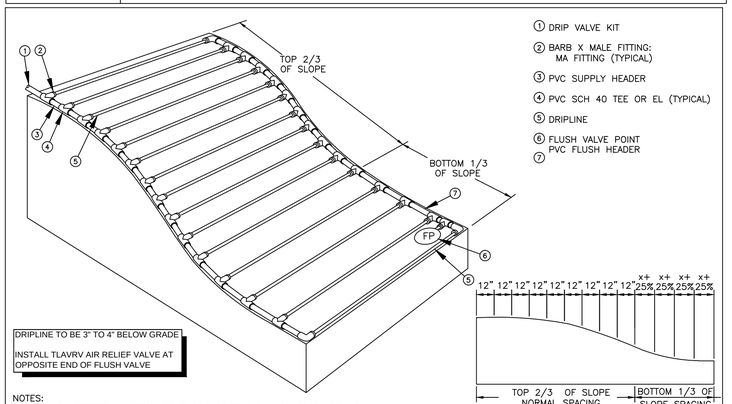

1. DRIP VALVE KIT
2. BARB X MALE FITTING: MA FITTING (TYPICAL)
3. PVC SUPPLY HEADER
4. PVC SCH 40 TEE OR EL (TYPICAL)
5. DRIPLINE
6. FLUSH VALVE POINT PVC FLUSH HEADER
7.

DRIPLINE TO BE 3" TO 4" BELOW GRADE

INSTALL TLAVRV AIR RELIEF VALVE AT OPPOSITE END OF FLUSH VALVE

NOTES:
1. DISTANCE BETWEEN LATERAL ROWS FOR BOTTOM 1/3 OF SLOPE TO BE 1.25X OPTIMAL ROW DISTANCE.
2. WHEN ELEVATION CHANGE EXCEEDS 10 FEET IT IS RECOMMENDED THAT A NEW DRIPLINE ZONE BE CREATED.

A6 DRIP IRRIGATION INSTALLATION (SLOPES) DETAIL

NTS | SN: ID001A00X

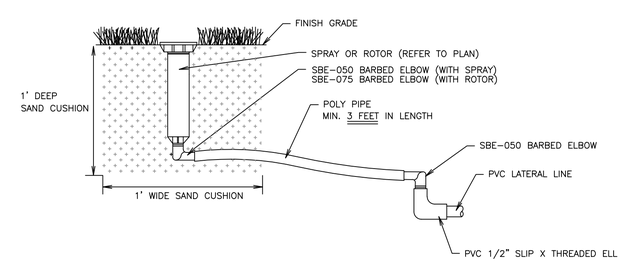

A11 DRIVE TURNS -SPRAY OR ROTOR INSTALLATION DETAIL

NTS | SN: ID006A001

DATE: 10-30-15 SIGNED

SIGNATURE DATE: For Permit Only

TID,INC.
5646 MILTON STREET
SUITE 711
DALLAS, TX 75206
O: 214-660-9399
F: 214-722-0237

QuikTrip No. 0643S

8601 Mexico Road
O'Fallon, Missouri 63366

© COPYRIGHT QUIKTRIP CORPORATION 2012 ANY UNAUTHORIZED USE, REPRODUCTION, PUBLICATION, DISTRIBUTION, OR SALE IN WHOLE OR IN PART, IS STRICTLY FORBIDDEN.

PROTOTYPE:	P-83
DIVISION:	06
VERSION:	001
DESIGNED BY:	SEH
DRAWN BY:	SEH
REVIEWED BY:	TID

REV	DATE	DESCRIPTION

ORIGINAL ISSUE DATE: 07-24-15

SHEET TITLE: IRRIGATION DETAILS

SHEET NUMBER: L510