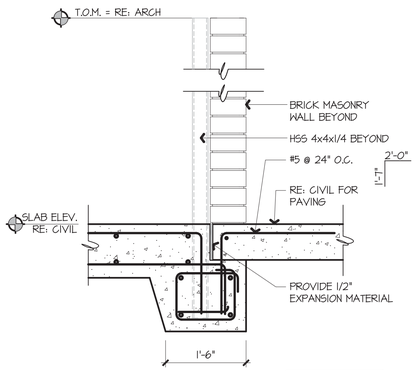

RE: E14-S520 FOR INFO NOT SHOWN

K1 TRASH ENCLOSURE DETAIL

3/4" = 1'-0" | E10-S520

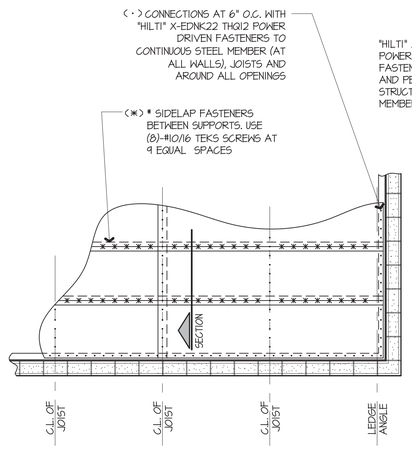

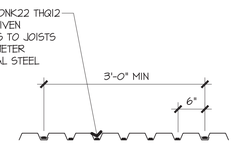

SECTION

CONNECTOR PATTERN DIAGRAM (36/T1)

YIELD STRESS = 33 KSI
Ip = 0.155 in^4
In = 0.183 in^4
Sp = 0.186 in^3
Sn = 0.192 in^3
MINIMUM DIAPHRAGM SHEAR CAPACITY = 526 PLF

K4 ROOF DIAPHRAGM

3/4" = 1'-0" | A1-S130

K9 NOT USED

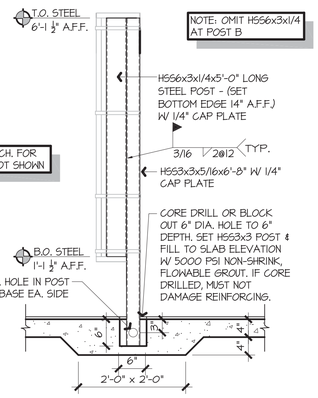

NOTE: OMIT HSS6x3x1/4 AT POST B

RE: ARCH. FOR INFO. NOT SHOWN

POST A

E1 PARTITION POST

3/4" = 1'-0" | A1-S101

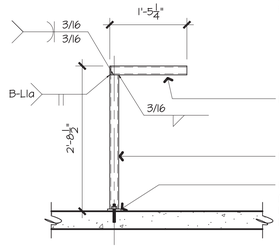

3 POSTS REQ'D EACH RESTROOM

E4 COUNTER SUPPORT

3/4" = 1'-0" | A1-S101

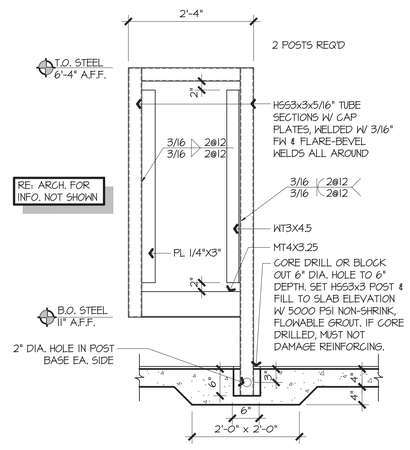

RE: ARCH. FOR INFO. NOT SHOWN

E7 URINAL SCREEN POST

3/4" = 1'-0" | A1-S101

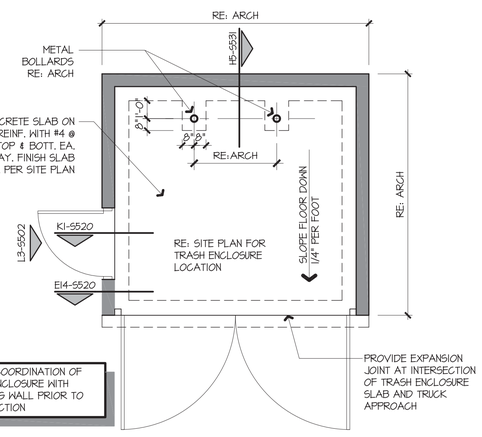

VERIFY COORDINATION OF TRASH ENCLOSURE WITH RETAINING WALL PRIOR TO CONSTRUCTION

E10 TRASH ENCLOSURE PLAN

3/4" = 1'-0" | E14-S520, HS-SS31

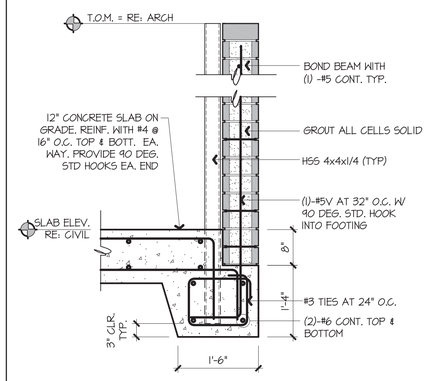

E14 TRASH ENCLOSURE DETAIL

3/4" = 1'-0" | E10-S520

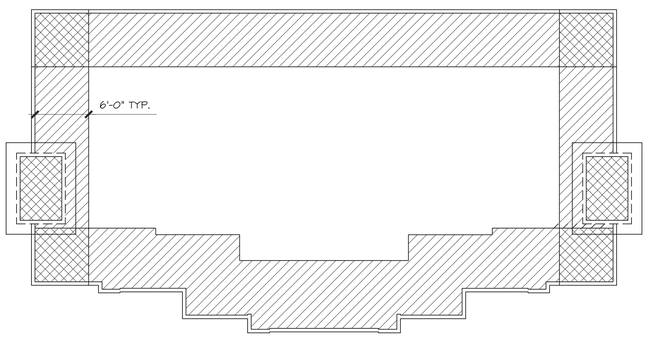

-5 PSF
-4 PSF
-4 PSF

A1 WIND UPLIFT DIAGRAM

3/4" = 1'-0" | A1-S130

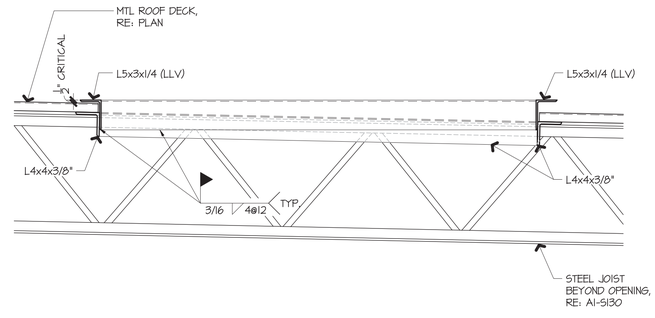

A8 RTU LEVELING FRAME

1" = 1'-0" | A1-S130

A13 NOT USED

RODNEY W. SOMMER - P.E.
MO# 020991

SIGNATURE DATE: 10/06/15

Norton & Schmidt
Consulting Engineers, L.L.C.
North Kansas City, MO • Atlanta, GA
311 East 11th Avenue
North Kansas City, MO 64116
Phone: (816) 421-4232
Fax: (816) 421-1956
www.nortonschmidt.com

N&S JOB NUMBER: 2015-1332

© 2015 Norton & Schmidt Consulting Engineers

MO CERT. OF AUTH. # 2008019746

QuikTrip No. 0643R

8601 MEXICO ROAD
O'FALLON, MISSOURI

© QUIKTRIP CORPORATION 2011
ANY UNAUTHORIZED USE, REPRODUCTION, PUBLICATION, DISTRIBUTION OR SALE IN WHOLE OR IN PART, IS STRICTLY FORBIDDEN.

PROTOTYPE	P-83
DIVISION	ST. LOUIS
VERSION	GEN III
DATE	05-01-2015

REV	DATE	DESCRIPTION

ORIGINAL ISSUE DATE: 07/24/2015

SHEET TITLE:

MISCELLANEOUS SECTIONS

SHEET NUMBER:

S520