1. RE: SITE PLAN FOR LOCATION OF ADA PARKING SPACES AND ACCESS AISLE IN RELATIONSHIP TO THE DOOR LOCATION. (THIS DETAIL IS FOR STRIPING LAYOUT ONLY)

2. PARKING STRIPES AND THE ADA INTERNATIONAL HANDICAP SYMBOL ARE TO BE PAINTED PER THE MANUFACTURER'S RECOMMENDATIONS. (RE: PROJECT SPECS)

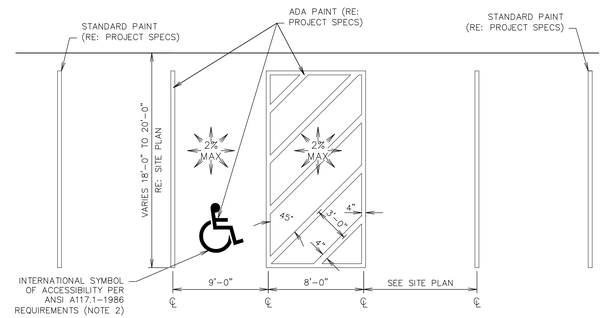

L1 DOUBLE STALL ADA PARKING STRIPING DETAIL

NTS | SN: AD001A008

1. RE: SITE PLAN FOR LOCATION OF ADA PARKING SPACES AND ACCESS AISLE IN RELATIONSHIP TO THE DOOR LOCATION. (THIS DETAIL IS FOR STRIPING LAYOUT ONLY)

2. PARKING STRIPES AND THE ADA INTERNATIONAL HANDICAP SYMBOL ARE TO BE PAINTED PER THE MANUFACTURER'S RECOMMENDATIONS. (RE: PROJECT SPECS)

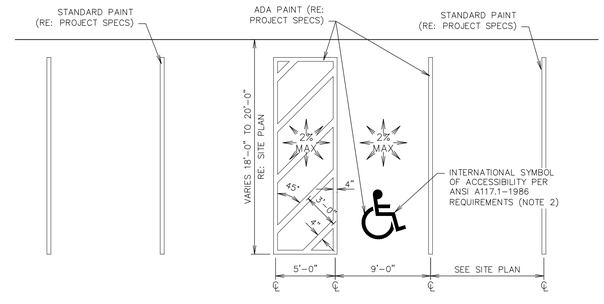

L6 SINGLE STALL ADA PARKING STRIPING DETAIL

NTS | SN: AD002A008

1. RE: SITE PLAN FOR DETERMINING LOCATION.
2. ADA SIGNAGE TO BE FASTENED TO FRAME USING POP RIVETS.
3. FLAT SIDE ENTRY SIGNS ARE A 2 PIECE DESIGN AND MUST BE WELDED TOGETHER ON SITE.

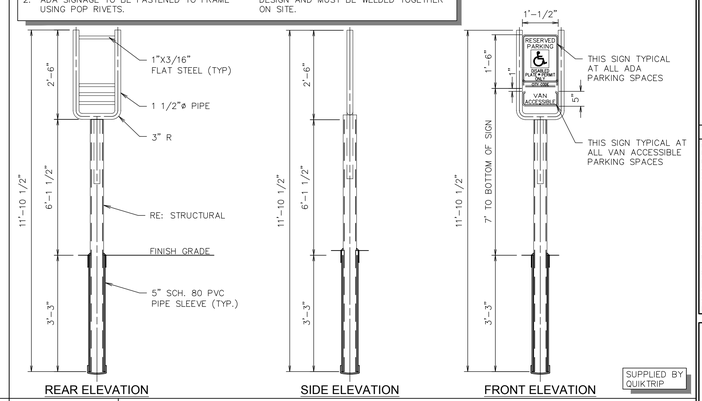

SUPPLIED BY QUIKTRIP

L11 ADA SIGN IN BOLLARD

NTS | SN: AD003C007

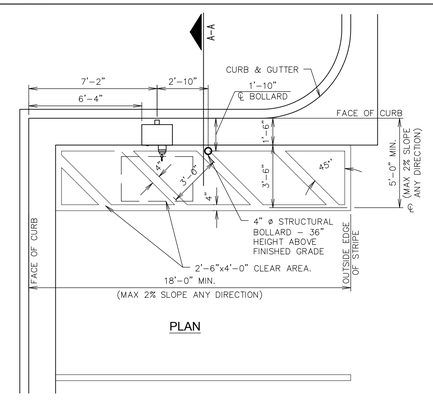

PLAN

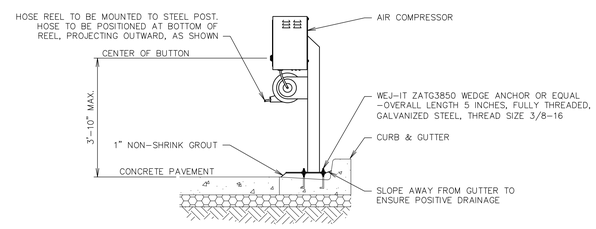

SECTION A-A

COMPRESSOR AND STAND SUPPLIED BY QUIKTRIP

F1 AIR SERVICE INSTALL PLAN (RIGHT HAND INSTALL)

NTS | SN: AD004A010

1. REQUIRED FOR ALL PRIVATE PROPERTY INTERIOR LOCATIONS.
2. RE: PROJECT SPECS FOR PRODUCT COLOR & TYPE.
3. PRODUCT SHOULD BE APPLIED PER MANUFACTURER'S SPECIFICATIONS.
4. PREPARATION OF THE SURFACE SHALL CONSIST OF A MINIMUM OF TWO APPLICATIONS OF POWER WASHING.
5. TWO APPLICATIONS OF PRODUCT SHALL BE ROLLED ON.

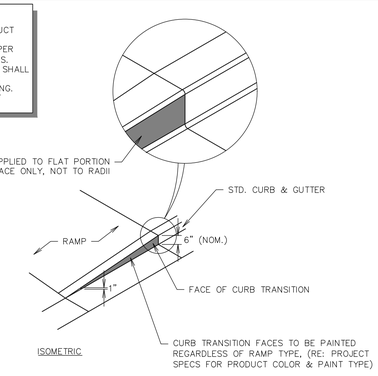

F11 RAMP - CURB TRANSITION PAINTING DETAIL

NTS | SN: AD015A002

RE: SITE PLAN FOR LOCATION OF ADA RAMP

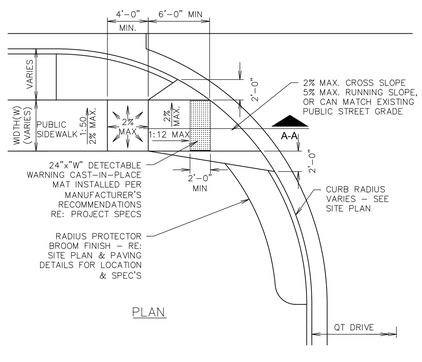

PLAN

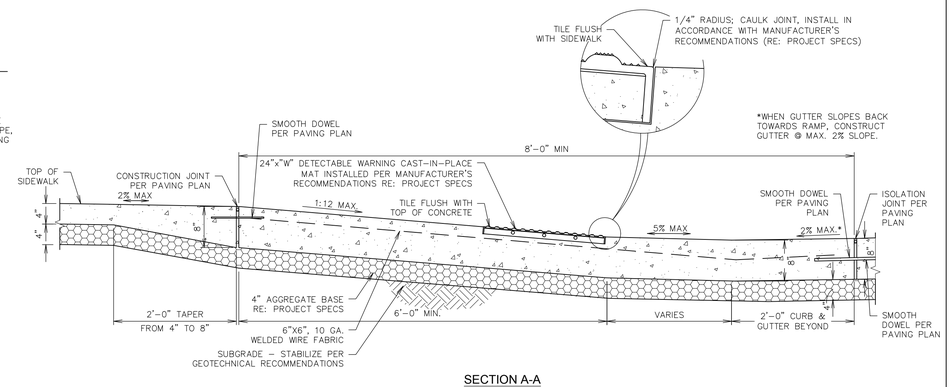

SECTION A-A

A1 ADA ACCESS RAMP AT DRIVE

NTS | SN: AD006A010

NOTES:
1. 6" RAISED SIDEWALK IS REQUIRED WHEN AN OBJECT WHICH PROTRUDES MORE THAN 4" HAS LEADING EDGES MORE THAN 27" AND NOT MORE THAN 80" ABOVE THE WALKING SURFACE.
2. CANE DETECTION THAT DOUBLES AS A UTILITY CABINET BASE SHALL HAVE A LEVEL PAD FOR THE CABINET. THE REMAINING PAD BEYOND THE CABINET SHALL BE SLOPED AWAY AT 2% FOR DRAINAGE.

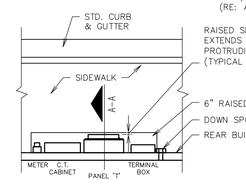

PLAN

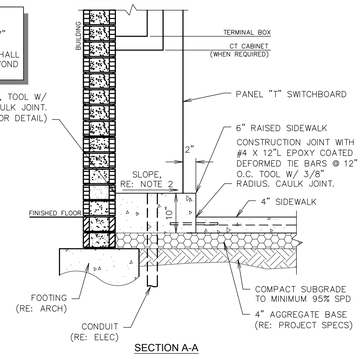

SECTION A-A

A11 CANE DETECTION FOR PROTRUDING OBJECTS

NTS | SN: AD014A003

STATE OF MISSOURI MICHAEL JAMES VELLOFF NO. E-2000161862 PROFESSIONAL ENGINEER

PROJECT NO.:161105

NAME: MICHAEL J. VELLOFF
LICENSE NUMBER: E-2000161862
DISCIPLINE: CIVIL
CORPORATION AUTHORITY NUMBER: 001194

THE SEAL OF MICHAEL J. VELLOFF ON THIS DRAWING APPLIES ONLY TO THE CIVIL/SITE ENGINEERING SHOWN. IT DOES NOT APPLY, NOR IS ANY RESPONSIBILITY TAKEN FOR ENVIRONMENTAL, GEOTECHNICAL (INCLUDING BUT NOT LIMITED TO SLOPE STABILITY), STRUCTURAL, HVAC, PLUMBING, ELECTRICAL, FIRE PROTECTION, TRAFFIC ENGINEERING, SURVEYING (BOUNDARY AND TOPOGRAPHIC), OR ARCHITECTURAL (BUILDING OR LANDSCAPE).

QuikTrip No. 0662

955 BRYAN ROAD
O'FALLAN, MO 63366

© COPYRIGHT QUIKTRIP CORPORATION 2011 ANY UNAUTHORIZED USE, REPRODUCTION, PUBLICATION, DISTRIBUTION, OR SALE IN WHOLE OR IN PART, IS STRICTLY FORBIDDEN.

PROTOTYPE: P-94-01
DIVISION: 06
VERSION: 001
DESIGNED BY: RKF
DRAWN BY: RKF
REVIEWED BY: MJV

REV	DATE	DESCRIPTION

ORIGINAL ISSUE DATE: 06/18/18

SHEET TITLE:
ADA DETAILS

SHEET NUMBER:
C510

FILE LOCATION:K:\161105 - QuikTrip #662 - Bryan Road and Veterans Memorial Parkway\Civil\06-0662 DETAILS ADA.dwg TAB NAME:ADA Detail Sheet 1 USER:rkfryer SAVED:6/11/2018 6:05 AM PLOTTED:6/12/2018 12:22 PM