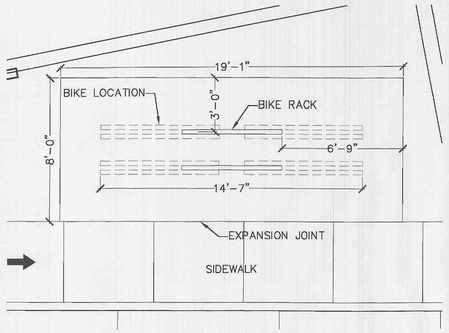

1 BIKE RACK

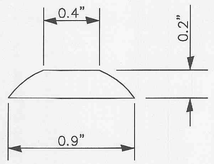

2 TRUNCATED DOME DETAIL

N.T.S.

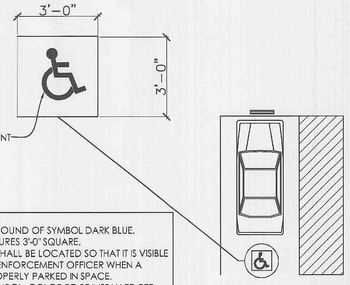

NOTE:
1. PAINT BACKGROUND OF SYMBOL DARK BLUE.
2. SYMBOL MEASURES 3'-0" SQUARE.
3. H.C. SYMBOL SHALL BE LOCATED SO THAT IT IS VISIBLE TO A TRAFFIC ENFORCEMENT OFFICER WHEN A VEHICLE IS PROPERLY PARKED IN SPACE.
4. HANDICAP SYMBOL, COLOR TO BE INSTALLED PER GOVERNMENT REQUIREMENTS. VERIFY WITH MALL STANDARDS.

3 HANDICAP SIGN DETAIL

N.T.S.

Fine Legend per City of O'Fallon

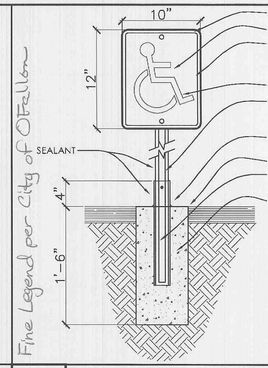

NOTE:
1. SIGNS TO BE CENTERED AT FRONT OF PARKING SPACE.
2. HANDICAP PARKING LOGO, COLOR, HEIGHT OF POLE, DIMENSIONS OF SIGN TO BE INSTALLED PER GOVT REQ. VERIFY WITH LOCAL STANDARDS.
3. SIGN TO BE REFLECTORIZED AND VISIBLE FROM EACH STALL OR SPACE.
4. VAN ACCESSIBLE PARKING SPACES TO HAVE " A VAN ACCESSIBLE' SIGN MTD. BELOW THE SYMBOL OF ACCESSIBILITY W/80" MIN. CLEAR.

4 HANDICAP SIGN DETAIL

N.T.S.

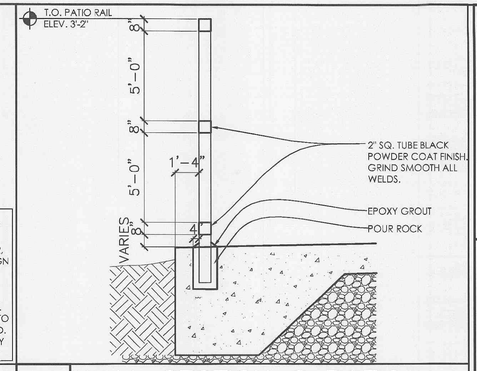

5 WALL SECTION @ PATIO

NOTES:

1. 8'-0"X19'-1" CONCRETE PAD TO MATCH SIDEWALK FINISH, THICKNESS, AND BASE
2. DERO BIKE BIKE RACK TO BE RED IN COLOR.
3. ATTACH BIKE RACK TO CONCRETE PAD & INSTALL AS PER MANUFACTURER RECOMMENDATIONS.

MANUFACTURED BY:
DERO BIKE RACK COMPANY
888.337.6729
WWW.DERO.COM

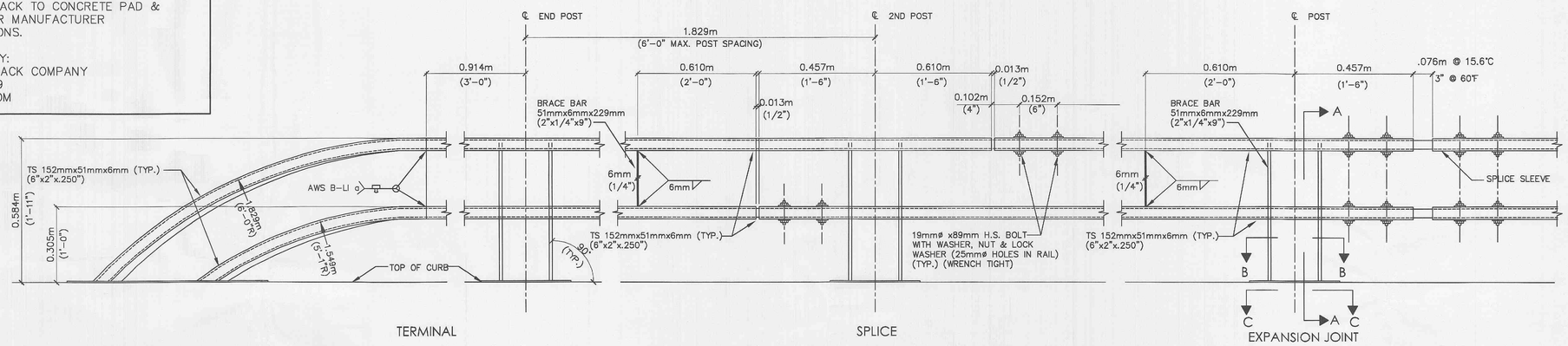

RAILING ELEVATION

NOT TO SCALE

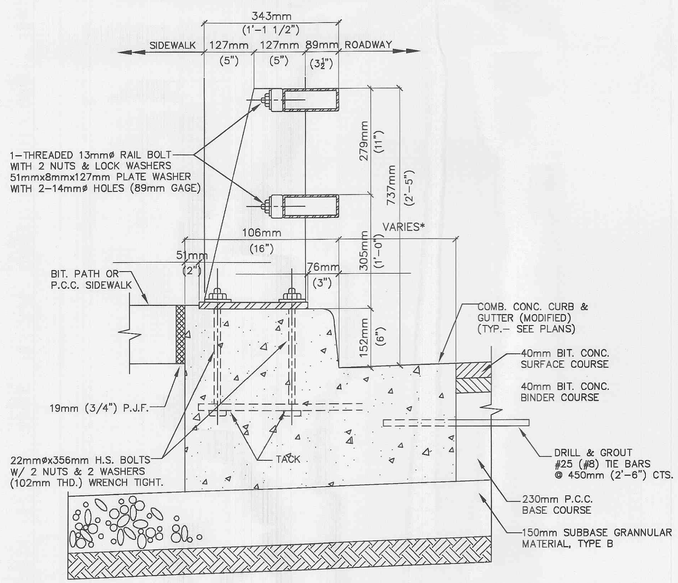

SECTION A

NOT TO SCALE

* FOR TYPE B-15.30 MOD. CURB, USE 305mm (12")
FOR TYPE B-15.60 MOD. CURB, USE 610mm (24")

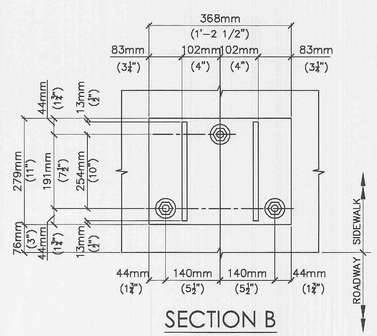

SECTION B

NOT TO SCALE

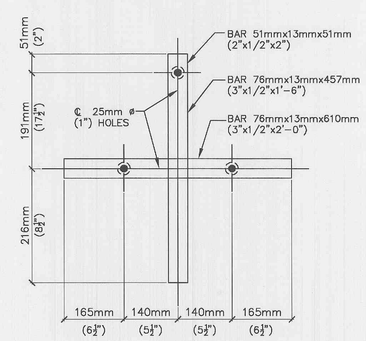

SECTION C

NOT TO SCALE

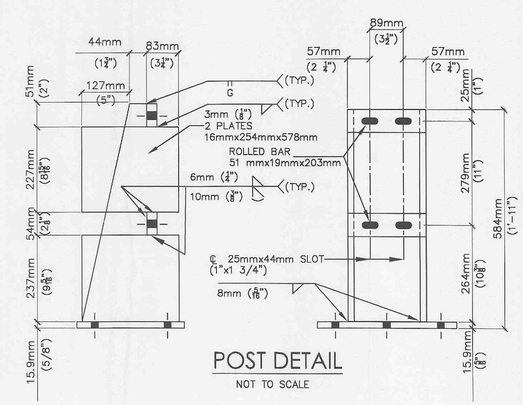

POST DETAIL

NOT TO SCALE

6 TRAFFIC BARRIER DETAIL

N.T.S.

PLANNING AND ZONING FILE # BA-V-05-66

RED ROBIN GOURMET BURGERS
1440 MEXICO LOOP ROAD EAST
O'FALLON, MO

SITE DETAILS
ENGINEERING RE-ISSUE: 10/28/05

CHIPMAN ADAMS LTD.
Architects
1850 N. Northwest Highway, Suite 400
Park Ridge, Illinois 60068-1463
T 847-298-6900 F 847-298-6966
One North Franklin, Suite 500
Chicago, Illinois 60606
Voice: 312-251-3000
Fax: 312-251-3015
www.akcorp.com
Edwards and Kelcey

Revisions
1. PLANNING & ZONING ISSUE 06/17/05
2. PLANNING & ZONING RE-ISSUE 07/06/05
3. PLAN REVIEW ISSUE 08/24/05
4. ENGR. RE-ISSUE @ 24X36 09/16/05

STATE OF MISSOURI
DOUGLAS C. KNUTH
NUMBER PE-020344
PROFESSIONAL ENGINEER

I HEREBY CERTIFY THAT THESE PLANS HAVE BEEN PREPARED UNDER MY SUPERVISION AND THAT TO THE BEST OF MY KNOWLEDGE, THE SAME COMPLY WITH ALL RULES, REGULATIONS AND ORDINANCES OF O'FALLON, MO RELATING TO LANDSCAPE, SITE, AND CIVIL.

ENGINEER

Drawn By	Checked By
NMG	JPG
Scale	Date
AS SHOWN	6/17/05

Job No. 05-4393

Sheet No. C2.1