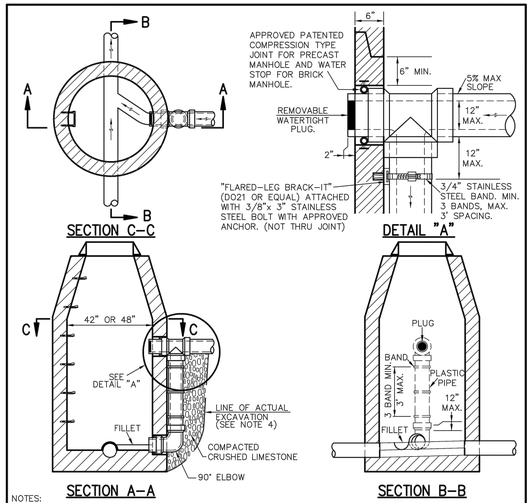

NOTES:

1) THE MINIMUM INSIDE DIAMETER FOR THE BASE AND RISER SECTIONS SHALL BE 42" FOR 8" DIAMETER SANITARY SEWERS AND A MINIMUM INSIDE DIAMETER OF 48" FOR ALL SANITARY AND COMBINED SEWERS LARGER THAN 8" DIAMETER.
2) NEW OUTSIDE DROP ON EXISTING MANHOLE REQUIRES THAT THE FLOWLINE OF THE NEW DROP PIPE ELBOW BE CONSTRUCTED AT THE SAME ELEVATION AS THE SPRINGLINE OF THE EXISTING SEWER MAIN AT THE CENTER OF THE EXISTING MANHOLE. A CLASS "A" CONCRETE FILLET AND INVERT SHALL BE CONSTRUCTED FOR DROP PIPE.
3) DIAMETER OF DROP PIPE FOR COMBINED SEWERS AND SANITARY SEWERS IS SAME AS INCOMING 8", 10" OR 12" PIPE SEWER UNLESS OTHERWISE SHOWN ON PROJECT PLANS. FOR SEWERS 15" THROUGH 24", A DROP IS NOT TO BE USED. RATHER, CONNECT TO MANHOLE AT OR WITHIN 24" ABOVE IT'S FLOWLINE.
4) IF EXCAVATED SPACE OUTSIDE OF DROP PIPE EXCEEDS ONE (1) FOOT, PROVIDE 6" CLASS "A" CONCRETE ENCASEMENT ON INCOMING LINE FROM WALL OF MANHOLE TO A MINIMUM OF TWO (2) FEET INTO UNDISTURBED EARTH WITH A MINIMUM OF 4-#4 REBARS FOR LENGTH OF ENCASEMENT OR INSTALL ONE (1) LENGTH OF D.I.P. FROM "TEE" FITTING INTO UNDISTURBED EARTH.

OUTSIDE FOULWATER DROP MANHOLE	METROPOLITAN ST. LOUIS SEWER DISTRICT *Standard Details of Sewer Construction*		
	Dr. S.A.M. Ch. P.W.S.	2009	SHEET 16

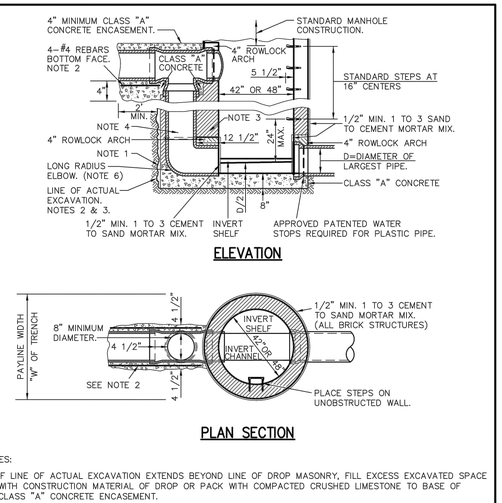

NOTES:

1) IF LINE OF ACTUAL EXCAVATION EXTENDS BEYOND LINE OF DROP MASONRY, FILL EXCESS EXCAVATED SPACE WITH CONSTRUCTION MATERIAL OF DROP OR PACK WITH COMPACTED CRUSHED LIMESTONE TO BASE OF CLASS "A" CONCRETE ENCASEMENT.
2) IF EXCAVATED SPACE OUTSIDE OF DROP PIPE MASONRY EXCEEDS ONE (1) FOOT, REINFORCE SEWER PIPE ENCASEMENT WITH A MINIMUM OF 4-#4 REBARS FOR LENGTH OF ENCASEMENT.
3) MASONRY ENCASEMENT OF DROP PIPE SHALL BE BONDED AND PLACED INTEGRALLY WITH MANHOLE MASONRY.
4) DIAMETER OF DROP PIPE FOR COMBINED SEWERS AND SANITARY SEWERS IS SAME AS INCOMING 8", 10" OR 12" PIPE SEWER UNLESS OTHERWISE SHOWN ON PROJECT PLANS. FOR SEWERS 15" THROUGH 24", A DROP IS NOT TO BE USED. CONNECT TO MANHOLE AT OR WITHIN 24" ABOVE IT'S FLOWLINE.
5) NEW OUTSIDE DROP ON EXISTING MANHOLE REQUIRES #4 REBARS SPACED VERTICALLY AT 24" C-C, ONE ON EACH SIDE OF THE DROP PIPE, GROUTED INTO 2" DIA. HOLES THROUGH MANHOLE WALL. (MINIMUM LENGTH OF REBARS 18").
6) NEW OUTSIDE DROP ON EXISTING MANHOLE REQUIRES THAT THE FLOWLINE OF THE NEW DROP PIPE ELBOW BE CONSTRUCTED AT THE SAME ELEVATION AS THE SPRINGLINE OF THE EXISTING SEWER MAIN AT THE CENTER OF THE EXISTING MANHOLE. A CLASS "A" CONCRETE FILLET AND INVERT SHALL BE CONSTRUCTED FOR DROP PIPE.

OUTSIDE FOULWATER DROP MANHOLE (ALTERNATE)	METROPOLITAN ST. LOUIS SEWER DISTRICT *Standard Details of Sewer Construction*		
	Dr. RGW/SAM Ch. J.C.K.	2009	SHEET 17

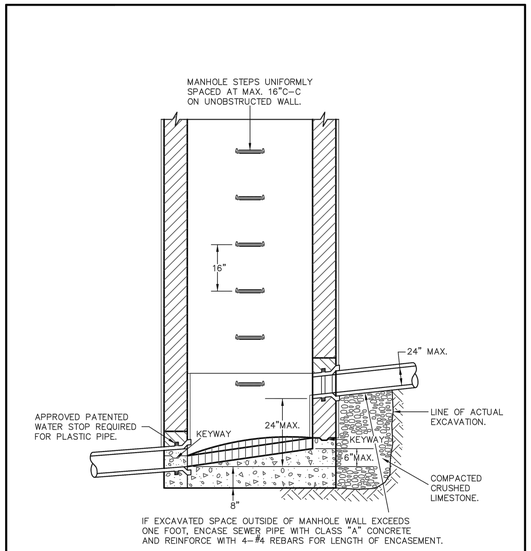

INSIDE FOULWATER MANHOLE (FOR FREE-FALL)	METROPOLITAN ST. LOUIS SEWER DISTRICT *Standard Details of Sewer Construction*		
	Dr. WSH/SAM Ch. J.C.K.	2009	SHEET 19

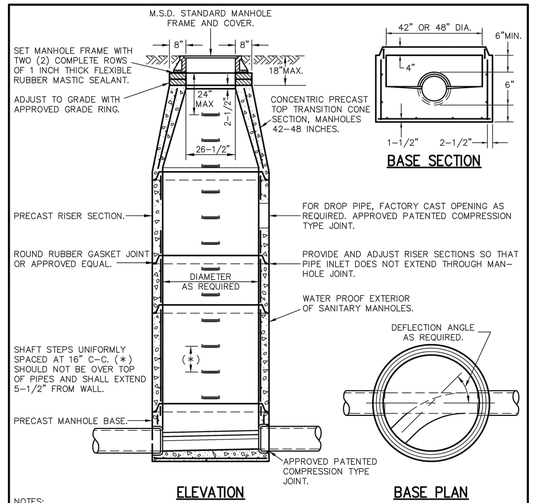

NOTES:

1) THE MINIMUM INSIDE DIAMETER FOR THE BASE AND RISER SECTIONS SHALL BE 42 INCHES FOR 8 INCH DIAMETER SANITARY SEWERS AND ALL STORM SEWERS. THE MINIMUM INSIDE DIAMETER FOR SANITARY SEWERS LARGER THAN 8 INCH DIAMETER IS 48 INCHES. MANHOLE SHALL MEET ASTM C-478 REQUIREMENTS.
2) FLOWLINE ELEVATION OF INCOMING PIPES SHALL BE 1 INCH HIGHER THAN THAT OF OUTGOING PIPE.
3) PIPE SIZES LARGER THAN 24 INCH DIAMETER MAY REQUIRE MANHOLE DIAMETERS OF 60 INCH, 72 INCH OR 96 INCH AS DETERMINED BY OUTSIDE DIAMETERS AND ORIENTATIONS OF CONNECTING PIPES.
4) ECCENTRIC CONES SHALL BE USED ON DIAMETERS 60 INCH AND LARGER. STEPS SHALL EXTEND DOWN VERTICAL WALL OF CONE.
5) PRIOR TO FABRICATION, SHOP DRAWINGS SHALL BE SUBMITTED TO THE DISTRICT FOR APPROVAL OF MAN-HOLES ON PIPE DIAMETERS LARGER THAN 24 INCH AND ALSO FOR THOSE STRUCTURES WITH A DROP PIPE CONNECTION.

PRECAST CONCRETE MANHOLE	METROPOLITAN ST. LOUIS SEWER DISTRICT *Standard Details of Sewer Construction*		
	Dr. WSH/SAM Ch. J.C.K.	2009	SHEET 21 (REV)

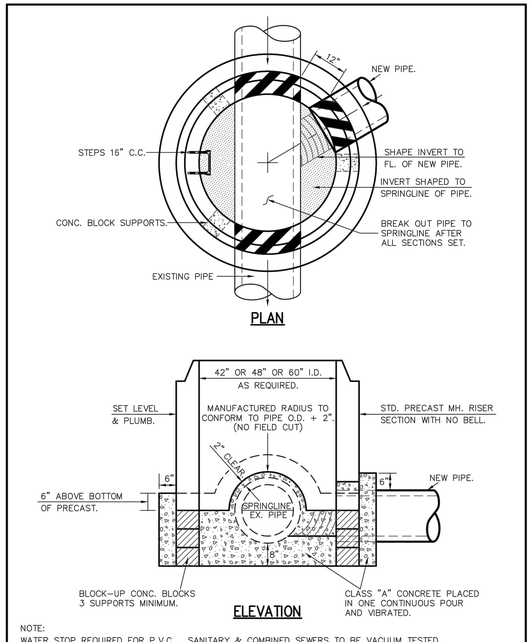

NOTE:
WATER STOP REQUIRED FOR P.V.C.. SANITARY & COMBINED SEWERS TO BE VACUUM TESTED.

PRECAST MANHOLE ON EXIST. PIPE W/CONTINUOUS FLOW ONLY	METROPOLITAN ST. LOUIS SEWER DISTRICT *Standard Details of Sewer Construction*		
	Dr. S.A.M. Ch. P.W.S.	2009	SHEET 22

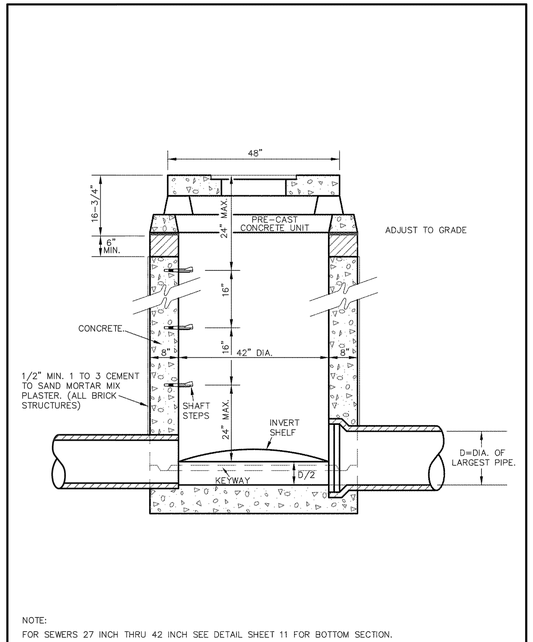

AREA INLET MANHOLE (12" THRU 24")	METROPOLITAN ST. LOUIS SEWER DISTRICT *Standard Details of Sewer Construction*		
	Dr. RGW/SAM Ch. J.C.K.	2009	SHEET 29

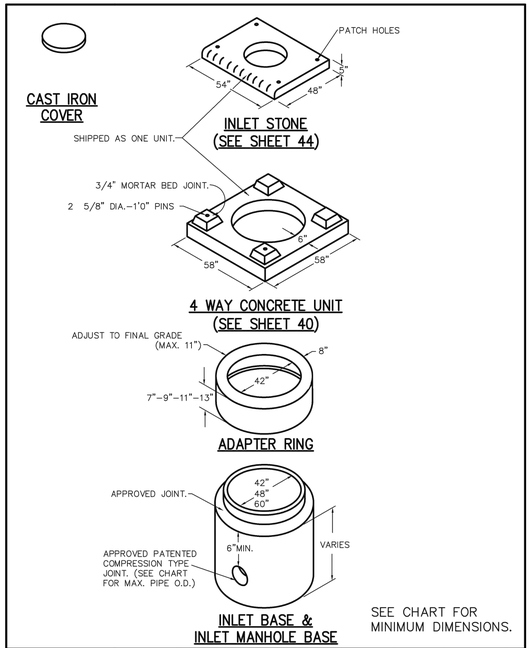

AREA INLET PRECAST CONCRETE	METROPOLITAN ST. LOUIS SEWER DISTRICT *Standard Details of Sewer Construction*		
	Dr. JLG/SAM Ch. J.C.K.	2009	SHEET 34

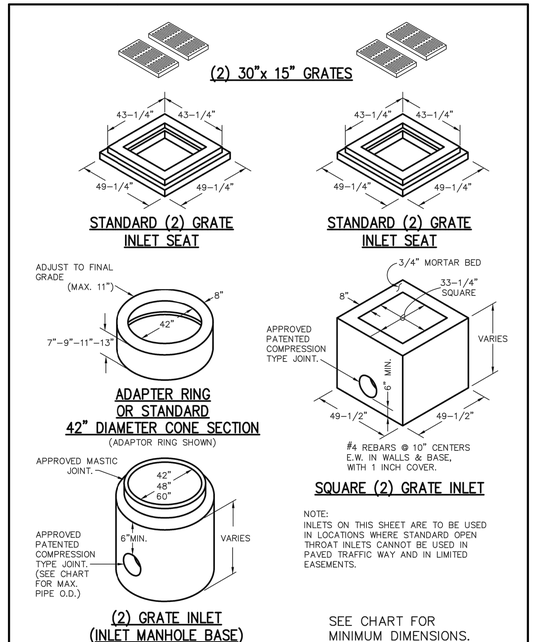

NOTE:
INLETS ON THIS SHEET ARE TO BE USED IN LOCATIONS WHERE STANDARD OPEN THROAT INLETS CANNOT BE USED IN PAVED TRAFFIC WAY AND IN LIMITED EASEMENTS.

2 GRATE INLETS PRECAST CONCRETE	METROPOLITAN ST. LOUIS SEWER DISTRICT *Standard Details of Sewer Construction*		
	Dr. JLG/SAM Ch. J.C.K.	2009	SHEET 35

PRINTS ISSUED
05/11/18 - Permit Set

REVISIONS:

HORNER SHIFRIN
101 LAURA K DR., STE. 101 O'FALLON, MO 63366-3991
636-329-9296 • FAX 844-339-2910 • WWW.HORNERSHIFRIN.COM
DISCIPLINE: PROFESSIONAL ENGINEERING
CERTIFICATE OF AUTHORITY: 000159
EXPIRATION DATE: DECEMBER 31, 2018

THE PROFESSIONAL'S WAXSE SIGNATURES AND SEALS APPEAR HERE, ASSUME RESPONSIBILITY FOR WHAT APPEARS ON THIS SHEET ONLY. ALL OTHER PLANS, SPECIFICATIONS, REPORTS, AND OTHER DOCUMENTS, OR PORTIONS THEREOF, ASSOCIATED WITH THIS PROJECT ARE NOT PART OF THE PROJECT FOR WHICH THIS SEAL INDICATES RESPONSIBILITY.

STATE OF MISSOURI
APRIL J. GEISMANN
NUMBER E-2001004592
PROFESSIONAL ENGINEER
7/18/18

Name: April Geismann
Discipline: Civil Engineer
License No. E2001004592
Expiration Date: 12/31/2019

RENEW O'FALLON

T.R. HUGHES BLVD
O'FALLON, MO 63366

SHEET TITLE STORM AND SANITARY SEWER DETAILS

PROJECT NUMBER: 17050

SHEET NUMBER:

C10.4

DRAWN BY: AMH CHECKED BY: AMG

DWG: C:\pwwork\aharrison\esdms19759\Details.dwg
PAGE SETUP NAME: ----
SAVE DATE: 7/19/2018 2:12:13 PM
CTB: Trans-std.ctb
PLOT DATE: 8/24/2018 1:43:43 PM
OPERATOR: AMHARRISON