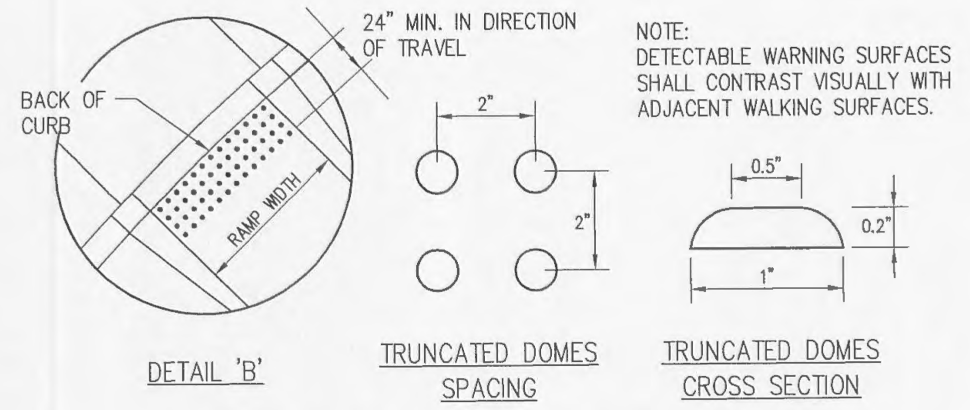

DETECTABLE WARNING AT CURB RAMPS - ADA

SCALE: N.T.S.

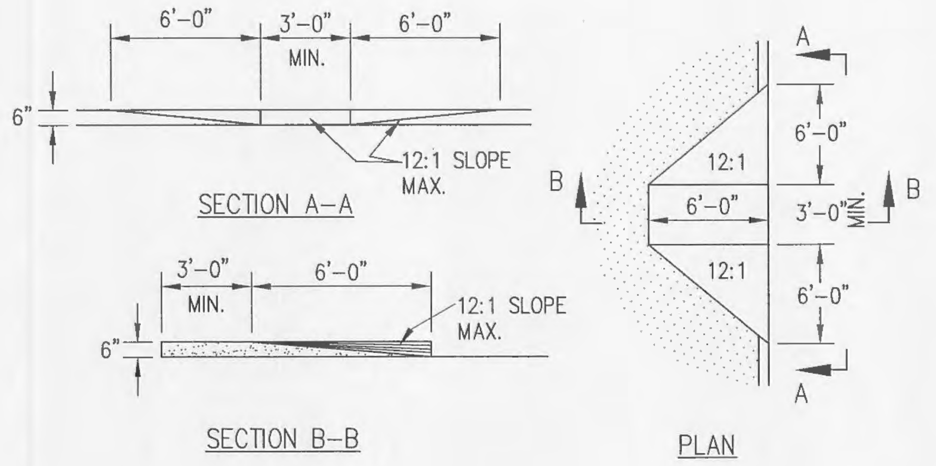

NOTE:
RAMPS SHALL HAVE DETECTABLE WARNINGS COMPLYING WITH ADAAG

ACCESSIBLE RAMP DETAIL

SCALE: N.T.S.

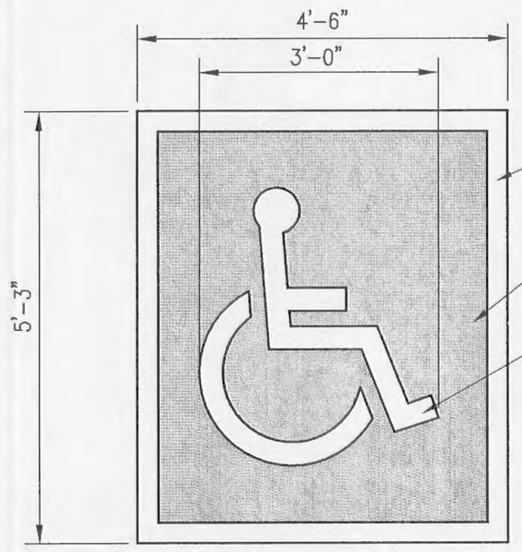

NOTE:
SYMBOL PROPORTIONS TO BE IN ACCORDANCE WITH ANSI A117.1 4.30

ACCESSIBLITY SYMBOL PAVEMENT MARKING DETAIL

SCALE: N.T.S.

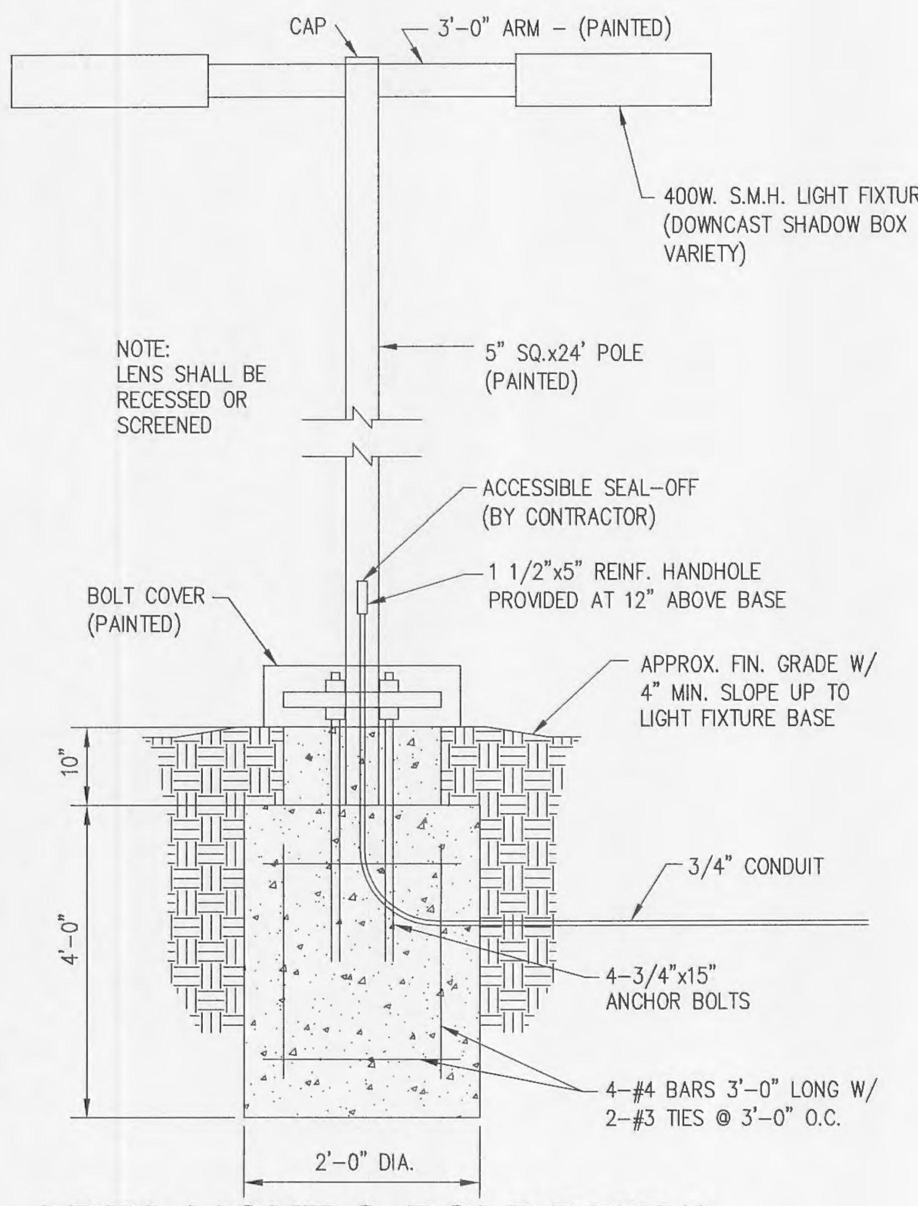

AREA LIGHT & POLE DETAIL

SCALE = N.T.S.

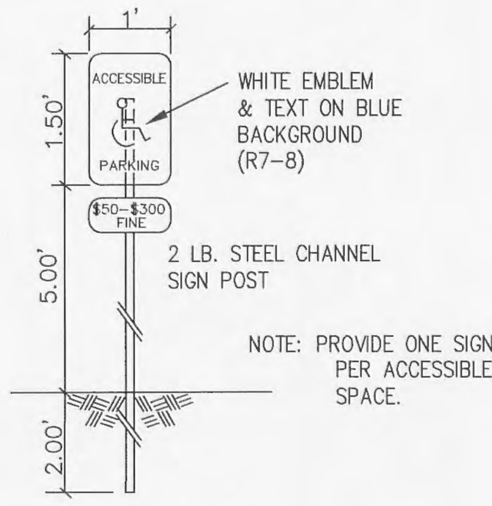

ACCESSIBLE PARKING SIGN

SCALE = N.T.S.

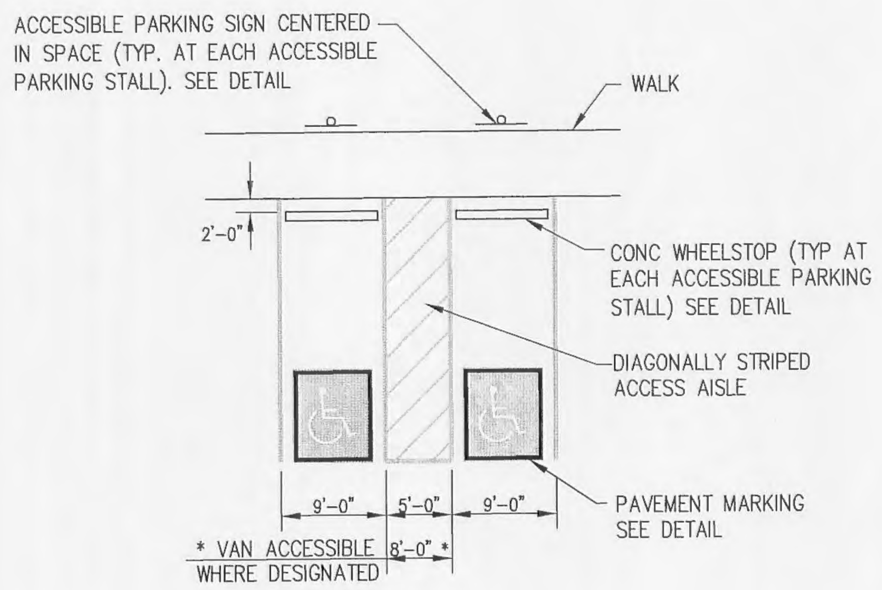

ACCESSIBLE PARKING STALL - ADA

SCALE : N.T.S.

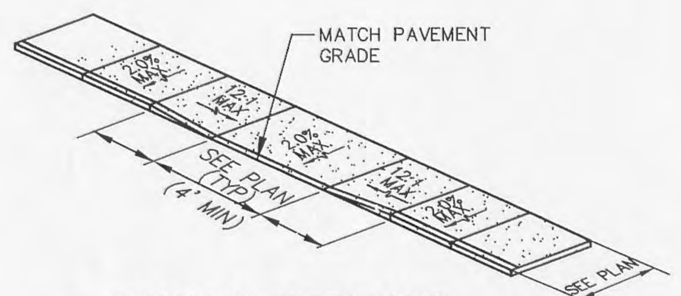

PARALLEL CURB RAMP AT ACCESSIBLE PARKING

(n.t.s.)

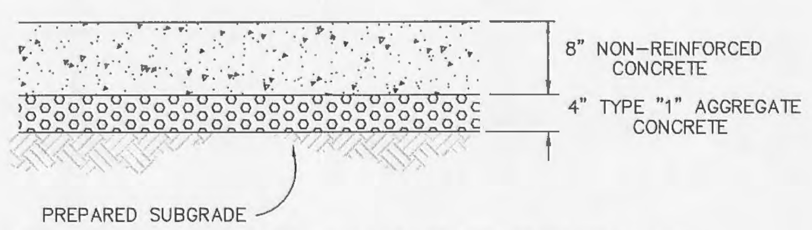

CONCRETE PAVEMENT DETAIL

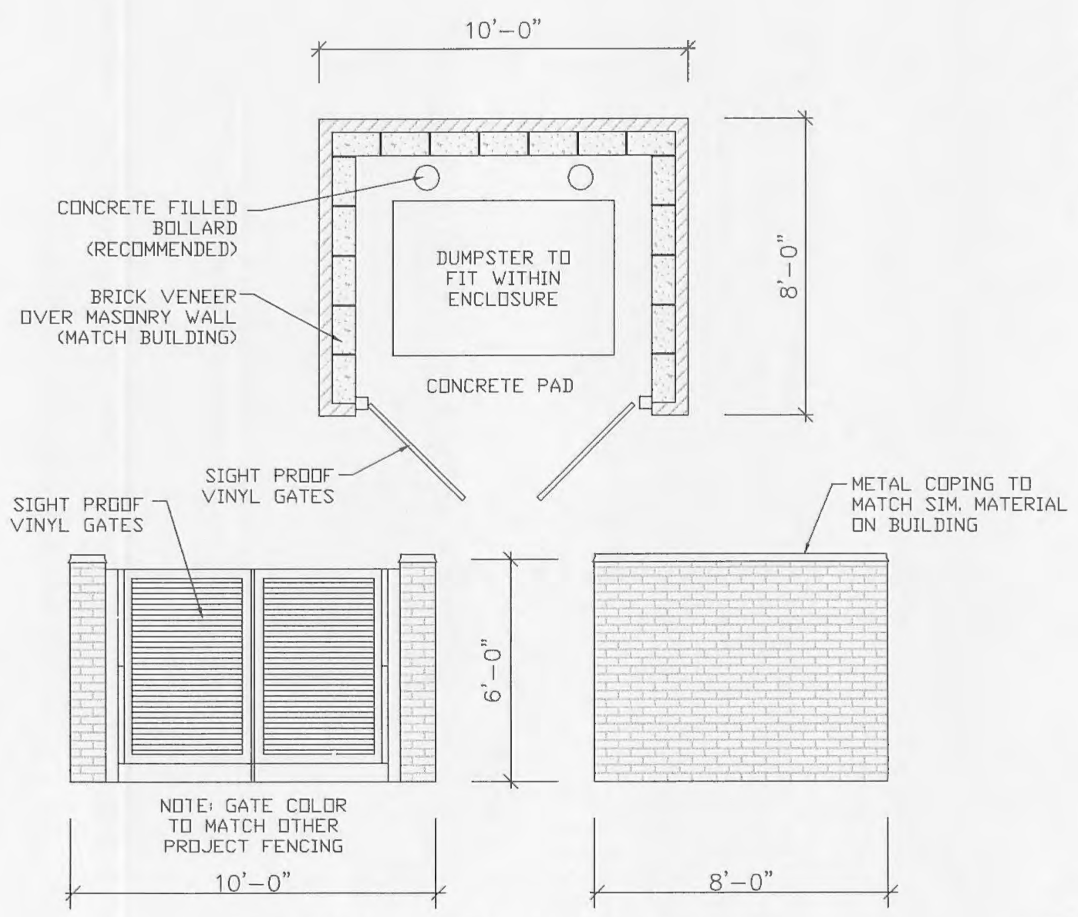

TRASH ENCLOSURE

N.T.S.

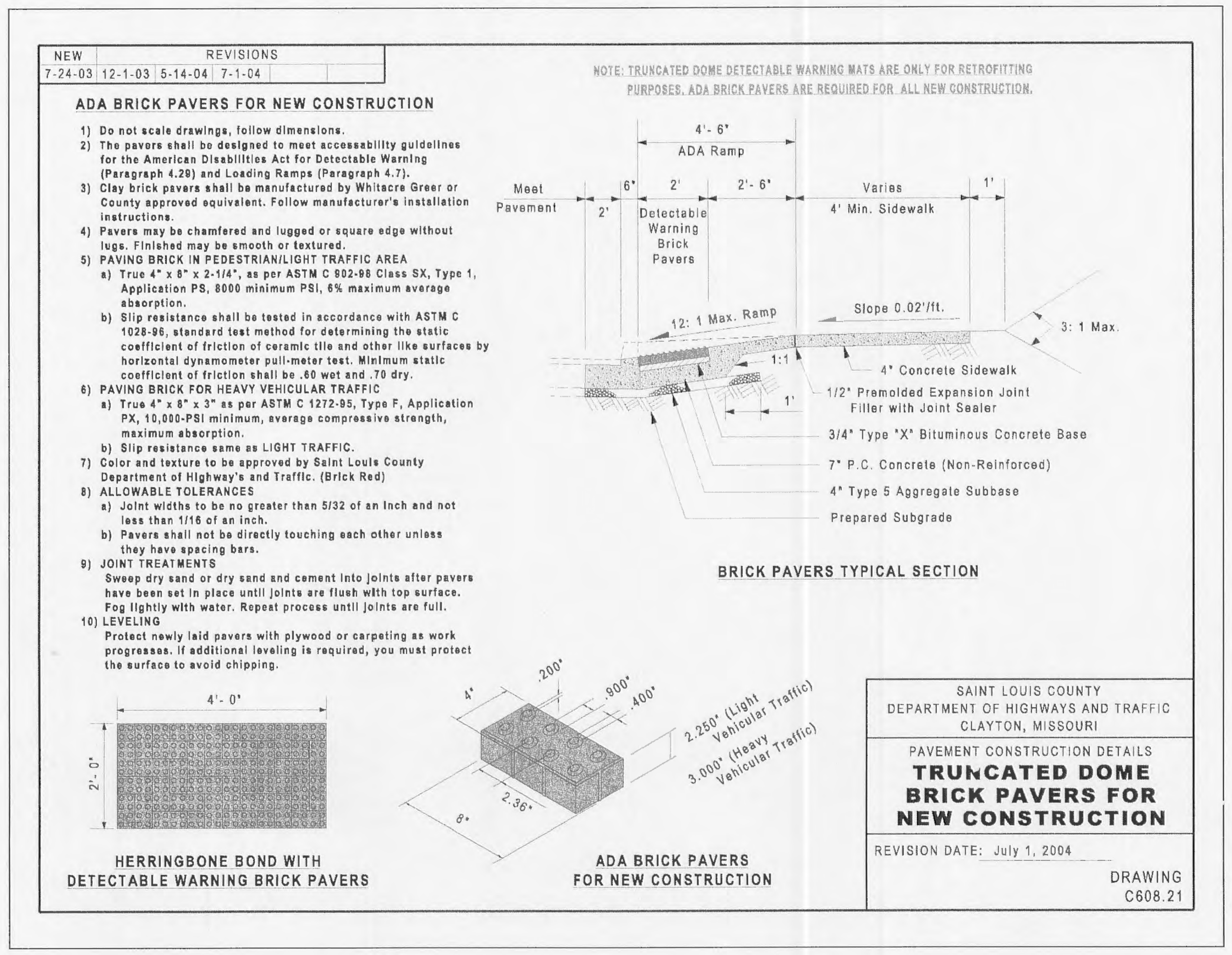

NEW	REVISIONS		
7-24-03	12-1-03	5-14-04	7-1-04

NOTE: TRUNCATED DOME DETECTABLE WARNING MATS ARE ONLY FOR RETROFITTING PURPOSES. ADA BRICK PAVERS ARE REQUIRED FOR ALL NEW CONSTRUCTION.

ADA BRICK PAVERS FOR NEW CONSTRUCTION

1) Do not scale drawings, follow dimensions.
2) The pavers shall be designed to meet accessability guidelines for the American Disabilities Act for Detectable Warning (Paragraph 4.29) and Loading Ramps (Paragraph 4.7).
3) Clay brick pavers shall be manufactured by Whitacre Greer or County approved equivalent. Follow manufacturer's installation instructions.
4) Pavers may be chamfered and lugged or square edge without lugs. Finished may be smooth or textured.
5) PAVING BRICK IN PEDESTRIAN/LIGHT TRAFFIC AREA
   a) True 4" x 8" x 2-1/4", as per ASTM C 902-98 Class SX, Type 1, Application PS, 8000 minimum PSI, 6% maximum average absorption.
   b) Slip resistance shall be tested in accordance with ASTM C 1028-96, standard test method for determining the static coefficient of friction of ceramic tile and other like surfaces by horizontal dynamometer pull-meter test. Minimum static coefficient of friction shall be .60 wet and .70 dry.
6) PAVING BRICK FOR HEAVY VEHICULAR TRAFFIC
   a) True 4" x 8" x 3" as per ASTM C 1272-95, Type F, Application PX, 10,000-PSI minimum, average compressive strength, maximum absorption.
   b) Slip resistance same as LIGHT TRAFFIC.
7) Color and texture to be approved by Saint Louis County Department of Highway's and Traffic. (Brick Red)
8) ALLOWABLE TOLERANCES
   a) Joint widths to be no greater than 5/32 of an inch and not less than 1/16 of an inch.
   b) Pavers shall not be directly touching each other unless they have spacing bars.
9) JOINT TREATMENTS
   Sweep dry sand or dry sand and cement into joints after pavers have been set in place until joints are flush with top surface. Fog lightly with water. Repeat process until joints are full.
10) LEVELING
   Protect newly laid pavers with plywood or carpeting as work progresses. If additional leveling is required, you must protect the surface to avoid chipping.

SAINT LOUIS COUNTY
DEPARTMENT OF HIGHWAYS AND TRAFFIC
CLAYTON, MISSOURI

PAVEMENT CONSTRUCTION DETAILS
TRUNCATED DOME BRICK PAVERS FOR NEW CONSTRUCTION

REVISION DATE: July 1, 2004

DRAWING C608.21

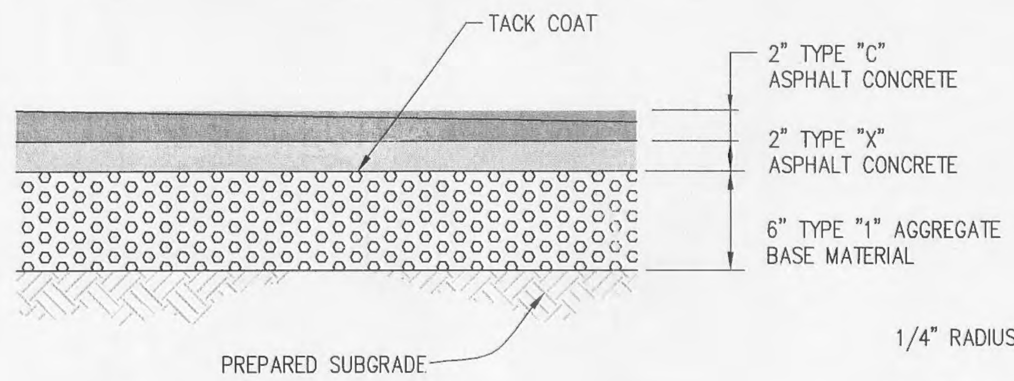

LIGHT DUTY ASPHALT PAVEMENT

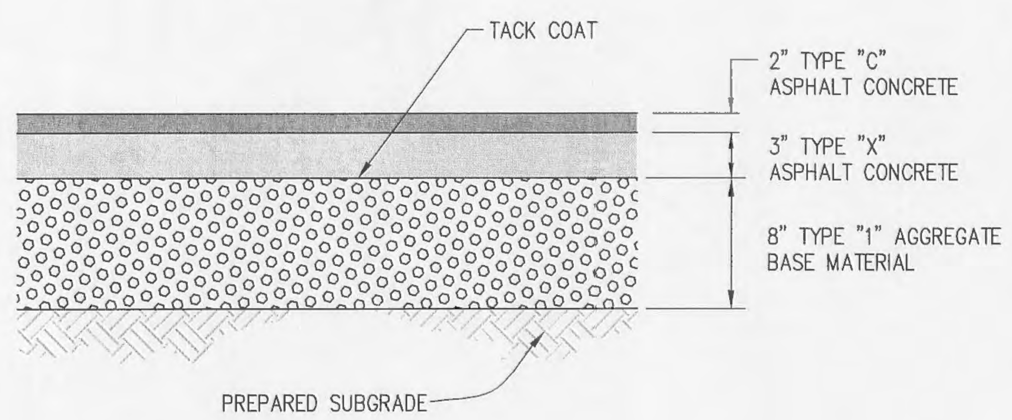

HEAVY DUTY ASPHALT PAVEMENT

NOTE:
PAVEMENT SECTIONS ARE BASED ON GEOTECHNICAL REPORT DATED NOVEMBER 10. 2005 BY TERRACON (314.692.8811)

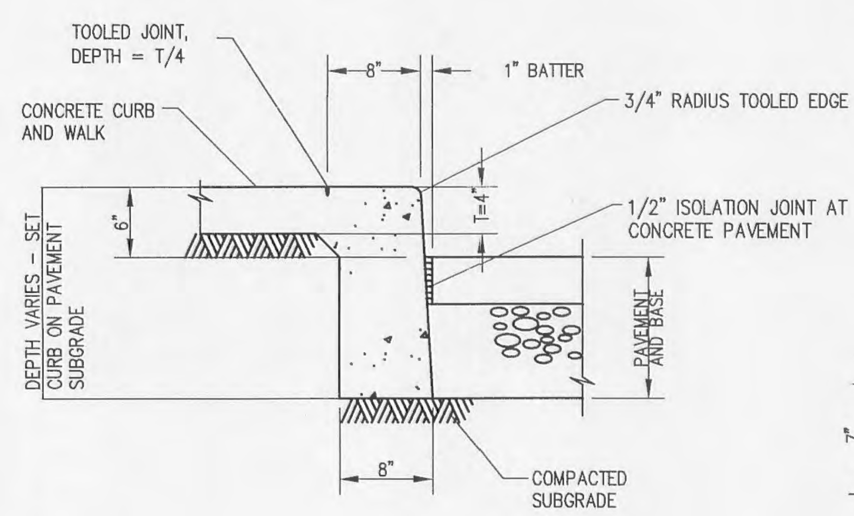

NOTE:
EXPANSION JOINT MATERIAL SHALL BE INSTALLED IN THE WALK FOR ITS FULL WIDTH AND DEPTH AT INTERVALS OF 24' MAX. COORDINATE WITH ARCHITECTURAL PLAN FOR EXACT LOCATION AND SPACING OF JOINTS.

CONCRETE SIDEWALK AND CURB

SCALE = N.T.S.

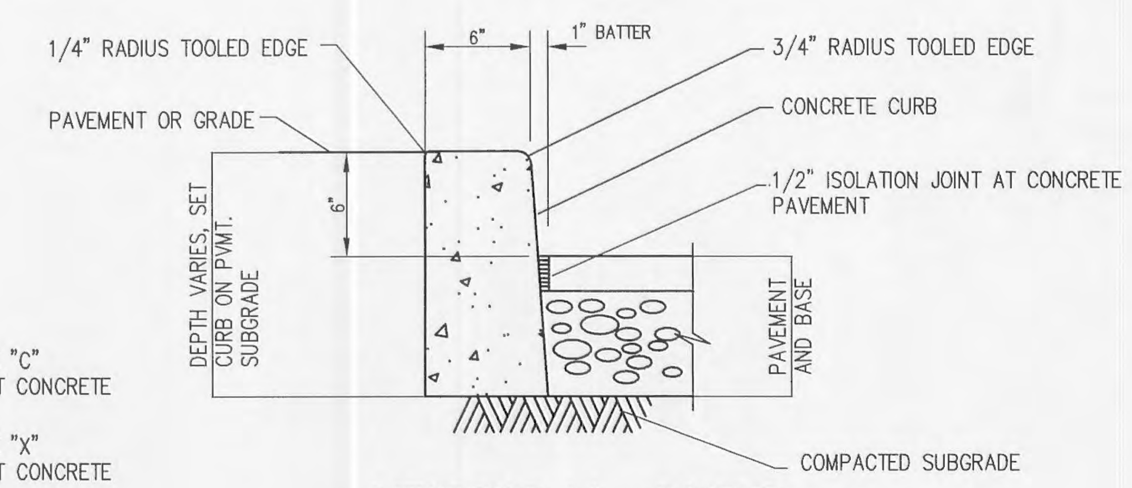

VERTICAL CURB

SCALE = N.T.S.

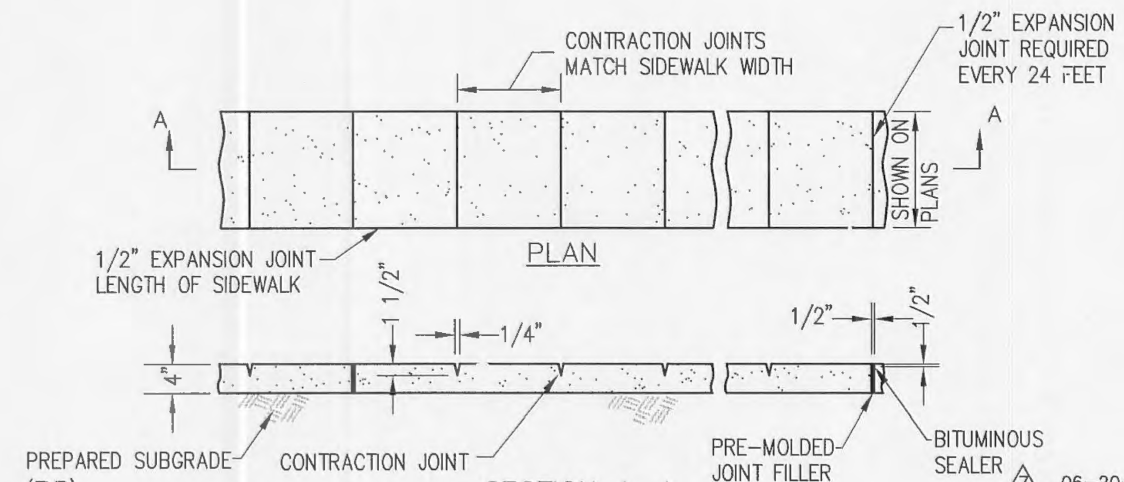

CONCRETE SIDEWALK DETAIL

(n.t.s.)

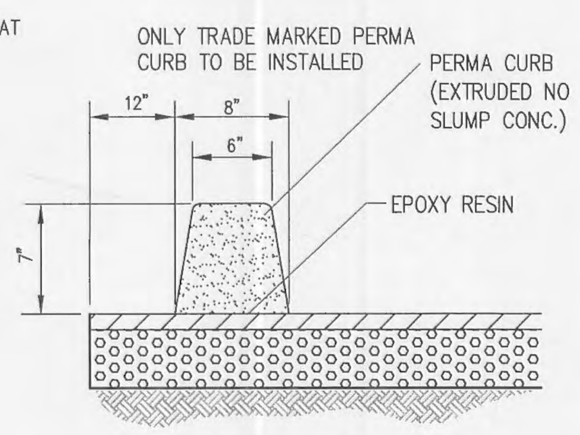

PERMA CURB DETAIL

SCALE = N.T.S.

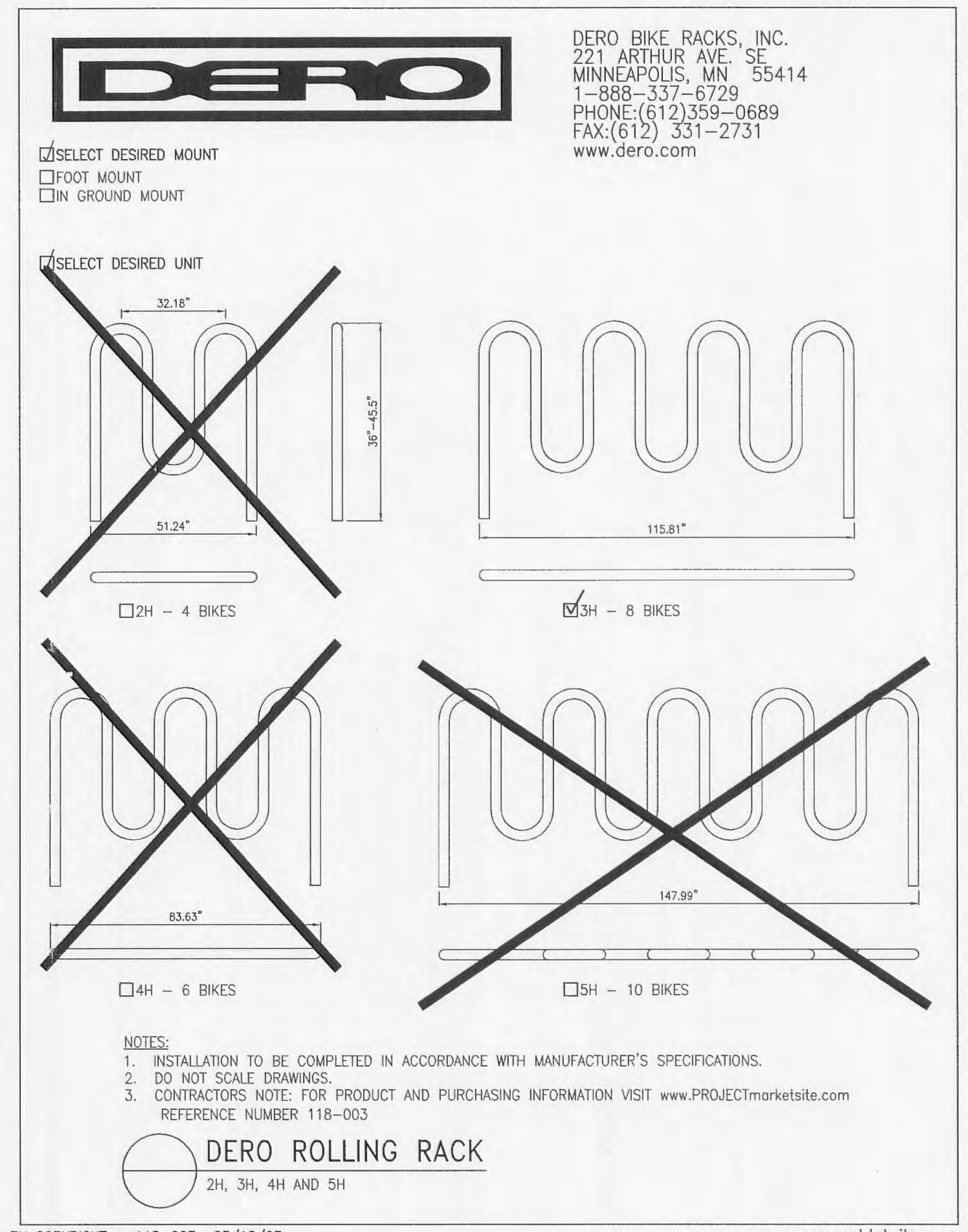

PROTECTED BY COPYRIGHT - 118-003 03/18/03

www.caddetails.com

BIKE RACK DETAIL

SCALE = N.T.S.

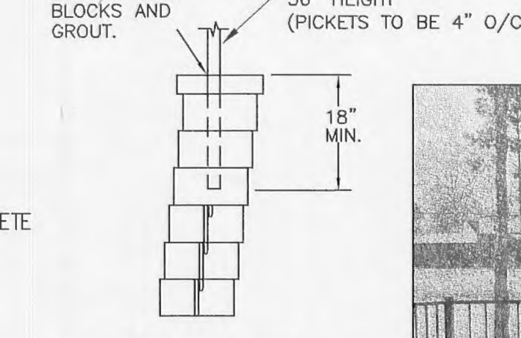

ALTERNATE DETAIL PER MANAUFACTURER OPTIONAL.

HANDRAIL @ WALL SECTION

(n.t.s.)

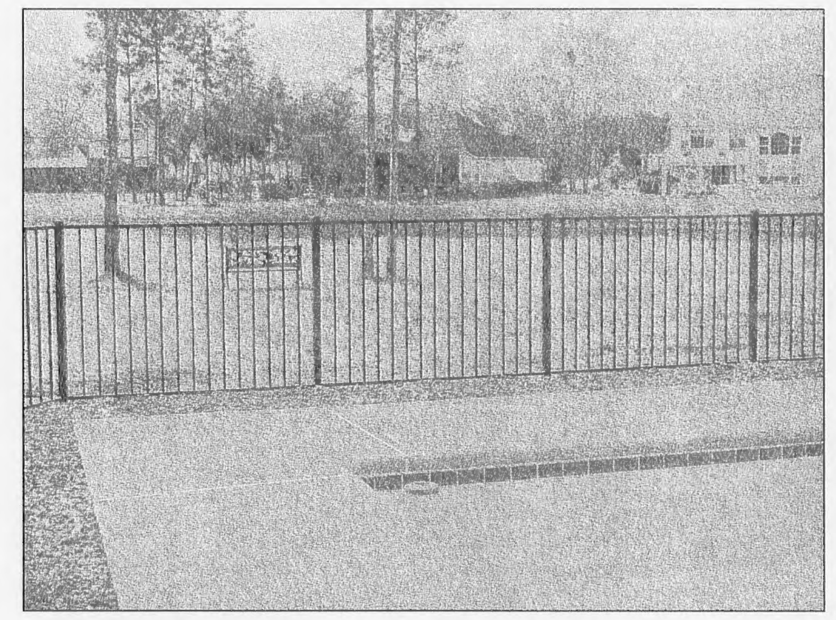

RETAINING WALL GUARDRAIL EXHIBIT

(n.t.s.)

RETAINING WALL GUARDRAIL SHALL BE BLACK, ANNODIZED ALUMINUM, TYPE S9 STORRS BY SPECRAIL (OR EQUIVALENT). RAIL SHALL BE CONTINUOUS ALONG RETAINING WALL.

7. 06-20-06 REVISED PER CITY COMMENTS DATED 6-13-2006
6. 05-31-06 REVISED PER CITY COMMENTS DATED 5-12-2006
5. 05-05-06 WATER LINE CHANGED FROM 4" TO 3"
4. 04-26-06 REVISED PER CITY COMMENTS
3. 02-28-06 REVISED WALL PROFILE A, ADDED COTTLEVILLE FIRE NOTES ON SHEET C2
2. 02-13-06 IN-HOUSE
1. 01-09-06 REVISED PER ARCHITECTURAL FOOTPRINT AND FIRE DEPT. COMMENTS

P&Z NOS: 99-104.12
APPROVED ON 12/15/05

06-20-06

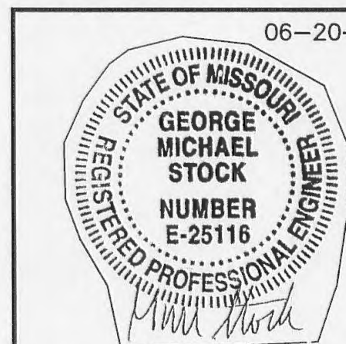

GEORGE M. STOCK E-25116

SITE IMPROVEMENT DETAILS

RESIDENCE INN - PROGRESS POINT VILLAGE

STOCK & ASSOCIATES
Consulting Engineers, Inc.
257 Chesterfield Business Parkway
St. Louis, MO 63005
PH. (636) 530-9100
FAX (636) 530-9130
e-mail: general@stockassoc.com
Web: www.stockassoc.com

DRAWN BY:	DATE:	CHECKED BY:	DATE:	JOB NUMBER:	SHEET:
J.P.P.	1/13/06	G.M.S.	1/13/06	205-3718	C8 of 12