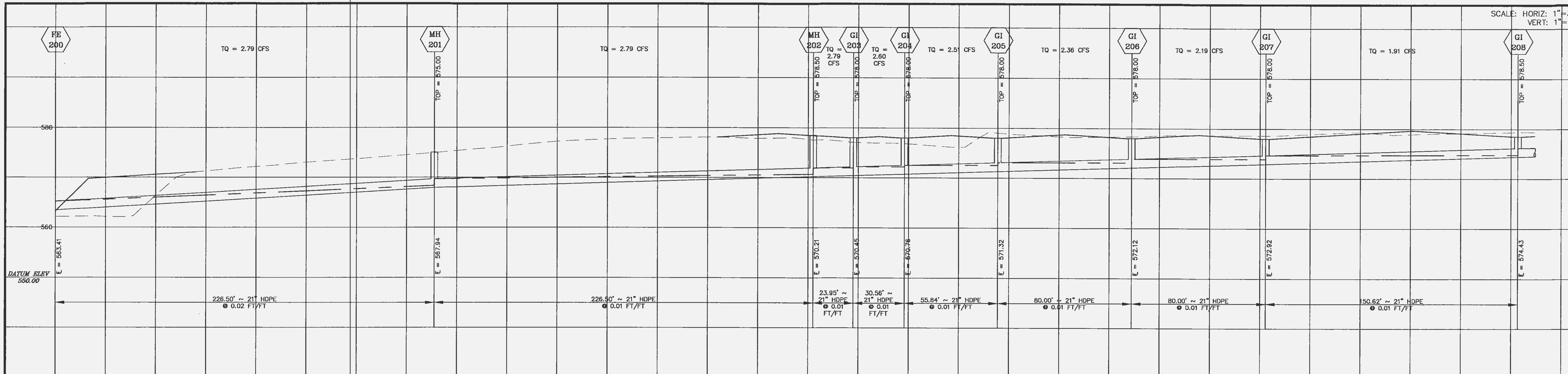

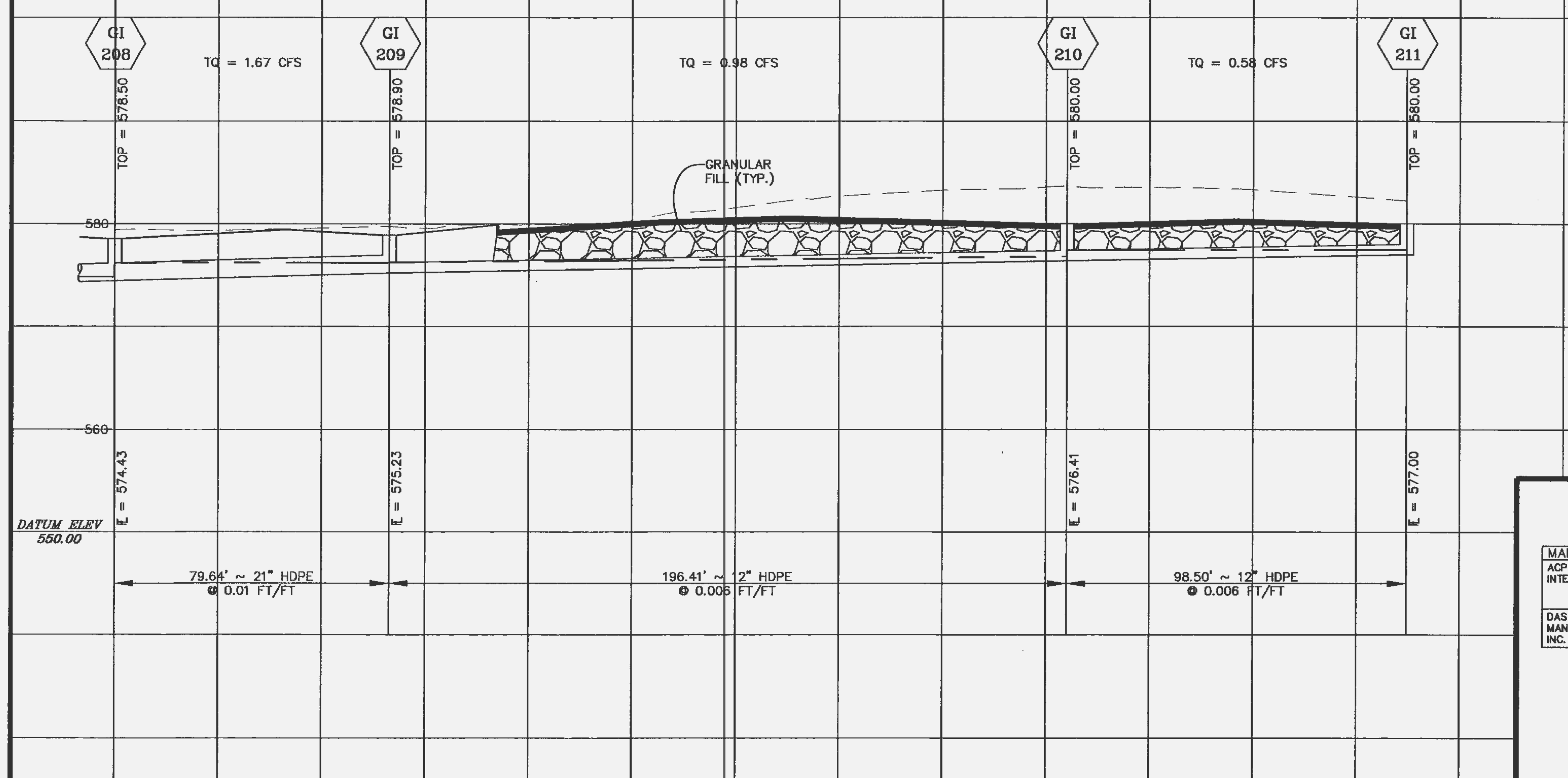

NOTE: ALL STORM SEWERS ARE TO BE PRIVATELY MAINTAINED

NOTE: ALL STORM SEWER STRUCTURE TOPS, THERE NEEDS TO BE LETTERING OR MARKERS STATING "DUMP NO WASTE DRAINS TO STREAM". SEE STANDARD CITY STORM DETAILS FOR ADDITIONAL INFORMATION.

St Charles County Government
Hydraulic Review Output Data

C:\Land Projects 3\11-1230-SAK-HOFF-ROAD\1230HQ Hydraulics.txt
9/9/2016

Calculations Under Full Flow

	Upp Str	Low Str	PL	S	Upp FL LN	Low FL LN	PS	Upp ST EL	Depth HY GR	Upp HY EL	Low HY EL	Hydr Grade	FR Head	VEL	VEL Head	Junc Loss	Turn Loss	Curve Loss	STR Grade	Inl Cap	DR Area	PI	Q	TQ	Pipe Cap	Remarks
1	GI 211	GI 210	99	12	577.00	576.41	0.60	580.00	2.56	577.44	577.41	0.00020	0.02	0.74	0.01	0.01	0.00	0.00	0	4.00	0.16	3.63	0.58	0.58	2.99	
2	GI 210	GI 209	196	12	576.41	575.23	0.60	580.00	3.20	576.80*	576.23	0.00060	0.12	1.25	0.02	0.00	0.00	0.00	0	4.00	0.13	3.08	0.40	0.98	2.99	
3	GI 209	GI 208	80	21	575.23	574.43	1.00	578.90	2.70	576.20	576.18	0.00010	0.01	0.68	0.01	0.00	0.01	0.00	0	4.00	0.23	3.00	0.69	1.67	17.17	
4	GI 208	GI 207	151	21	574.43	572.92	1.00	578.50	3.69	574.81*	574.67	0.00010	0.02	0.79	0.01	0.00	0.00	0.00	0	4.00	0.13	1.87	0.24	1.91	17.17	
5	GI 207	GI 206	80	21	572.92	572.12	1.00	578.00	4.11	573.88	573.87	0.00020	0.02	0.91	0.01	0.00	0.00	0.00	0	4.00	0.15	1.87	0.28	2.19	17.17	
6	GI 206	GI 205	80	21	572.12	571.32	1.00	578.00	4.91	573.09	573.07	0.00020	0.02	0.98	0.01	0.00	0.00	0.00	0	4.00	0.09	1.87	0.17	2.36	17.17	
7	GI 205	GI 204	56	21	571.32	570.76	1.00	578.00	5.48	572.52	572.51	0.00020	0.01	1.04	0.02	0.00	0.00	0.00	0	4.00	0.08	1.87	0.15	2.51	17.17	
8	GI 204	GI 203	31	21	570.76	570.45	1.01	578.00	5.79	572.21	572.20	0.00030	0.01	1.08	0.02	0.00	0.00	0.00	0	4.00	0.05	1.87	0.09	2.60	15.92	
9	GI 203	MH 202	24	21	570.45	570.21	1.00	578.00	6.02	571.98	571.98	0.00030	0.01	1.16	0.02	0.00	0.01	0.00	0	4.00	0.10	1.87	0.19	2.79	17.17	
10	MH 202	MH 201	227	21	570.21	567.94	1.00	578.50	7.83	570.67*	569.69	0.00030	0.07	1.16	0.02	0.00	0.01	0.00	0	0.00	0.00	0.00	0.00	2.79	17.17	
11	MH 201	FE 200	227	21	567.94	563.41	2.00	575.00	6.64	568.36*	565.16	0.00030	0.07	1.16	0.02	0.00	0.00	0.00	0	0.00	0.00	0.00	0.00	2.79	24.28	INSIDE TOP OF PIPE 565.16

MANUFACTURER	SIZE	ADHESIVE	STYLE	MESSAGE (PART #)	WEBSITE
ACP INTERNATIONAL	3 7/8"	EPOXY	CRYSTAL CAP	NO DUMPING DRAINS TO WATERWAYS (SD-W-CC)	www.acpinternational.com
DAS MANUFACTURING, INC.	4"	EPOXY	STANDARD STYLE	NO DUMPING DRAINS TO STREAM (#SDS)	www.dasmanufacturing.com

THE CITY ALLOWS THE MARKERS AND ADHESIVE PROCEDURES ONLY AS SHOWN IN THE TABLE OR AN APPROVED EQUAL BY ALMETEK INDUSTRIES. "PEEL AND STICK" ADHESIVE PADS WILL NOT BE ALLOWED.

STORM SEWER INLET MARKINGS

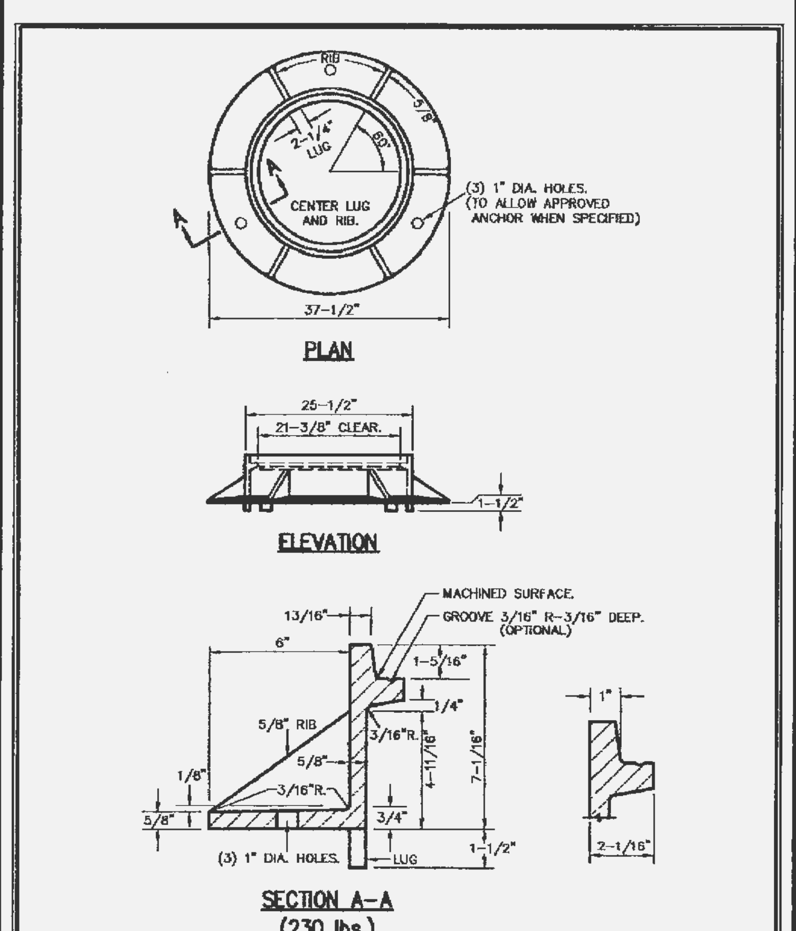

CAST IRON MANHOLE FRAME	METROPOLITAN ST. LOUIS SEWER DISTRICT *Standard Details of Sewer Construction*		
	Dr. DAB/SAM Ch. J.C.K.	2009	SHEET 52

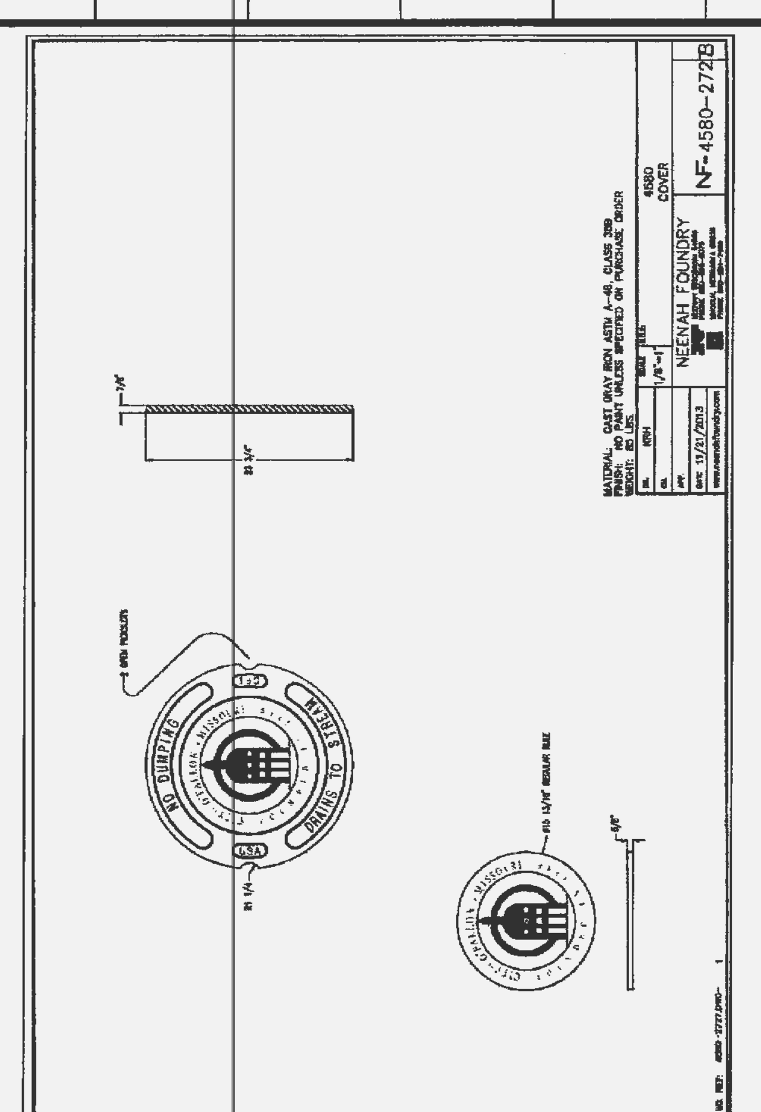

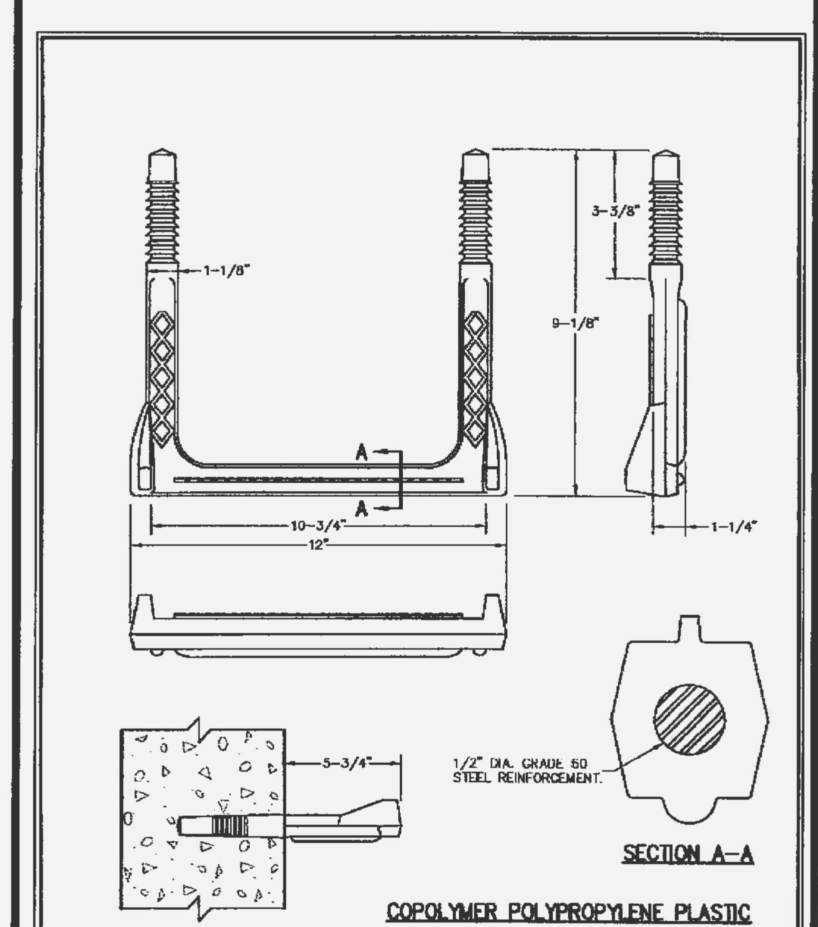

MANHOLE STEP FOR PRECAST & CAST-IN-PLACE MANHOLE	METROPOLITAN ST. LOUIS SEWER DISTRICT *Standard Details of Sewer Construction*		
	Dr. D.A.B. Ch. J.C.K.	2009	SHEET 58

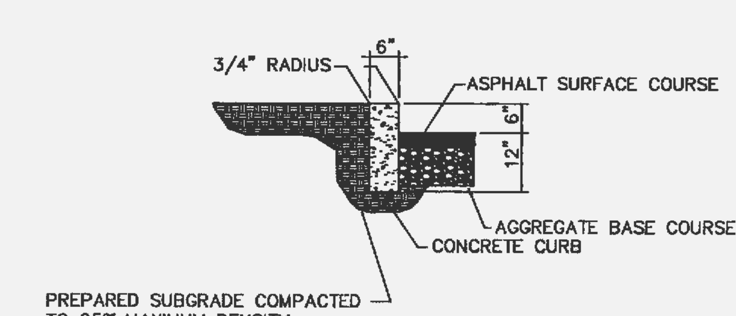

TYPICAL CURB

6" VERTICAL CONCRETE CURB DETAILS

N.T.S.

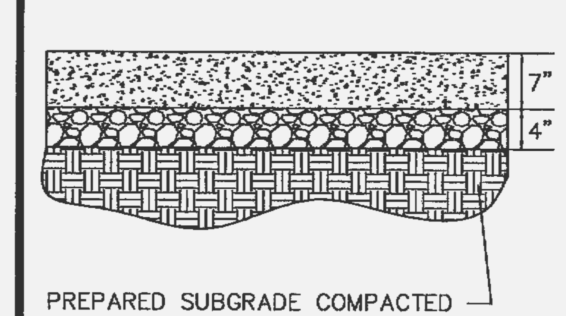

PAVEMENT DETAIL

PROJECT TITLE:

S.A.K. HQ PARKING ADDN

STORM SEWER PROFILES

DATE:	NO.:	REVISION:
12/19/16	2	ENGINEERING COMMENTS
11/29/16	1	ENGINEERING COMMENTS

MUSLER ENGINEERING COMPANY
CIVIL ENGINEERING - PLANNING - LAND SURVEYING
32 Portwest Court, St. Charles, Missouri 63303
Telephone: (636) 916-0444
Fax: (636) 916-3444
CERTIFICATE OF AUTHORITY: ENGINEERING: E-1230-D, LAND SURVEYING: LS-284-D

DATE:	DRAWN:	CHECKED:	PROJECT NO.:	SHEET NO.:
SEPT. 2016	J.R.S.		11-1230HQ	5 OF 7

DISCLAIMER OF RESPONSIBILTY

I hereby specify that the documents intended to be authenticated by my seal are limited to this sheet, and I hereby disclaim any responsibility for all other Drawings, Specifications, Estimates, Reports or other documents or instruments relating to or intended to be used for any part or parts of the architectural or engineering project or survey.

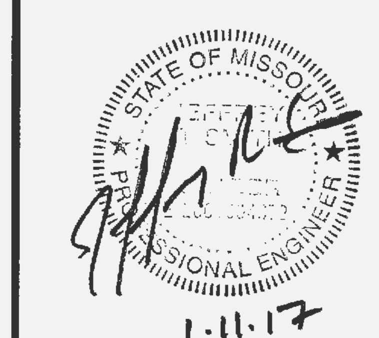

1.11.17

JEFFREY R. SMITH, P.E.
MO. P.E. # 2001004672

PREPARED FOR:
S.A.K. CONSTRUCTION, LLC
MR. CARY SHAW
864 HOFF ROAD
O'FALLON, MISSOURI 63366
TELEPHONE: 636-379-2350
FAX: 636-379-2461
E-mail: cashaw@sakcon.com

P & Z No.
12-10.01 & 12-10.02
City No.
CSP16-000034