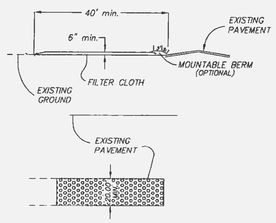

CONSTRUCTION SPECIFICATIONS

1. Stone Size: Use 2" stone or reclaimed or recycled concrete equivalent.
2. Length: As required, but not less than 40 feet.
3. Thickness: Not less than six (6) inches.
4. Width: twenty six (20) foot minimum.
5. Filter Cloth: Will be placed over the entire area prior to placing of the stone. Filter will not be required on a single family residence lot.
6. Surface Water: All surface water flowing or diverted toward construction entrances shall be piped across the entrance. If piping is impractical, a mountable berm with a 5:1 slope will be permitted.
7. Maintenance: The entrance shall be maintained in a condition which will prevent tracking or flowing of sediment onto existing pavement. This may require periodic top dressing with additional stone as conditions demand and repair and/or cleanout of any measures used to trap sediment. All sediment spilled, dropped, washed or tracked onto the public right-of-way must be removed immediately.
8. Washing: Wheels shall be cleaned to remove sediment prior to entrance onto the existing pavement. When washing is required, it shall be done on an area stabilized with stone and which drains into an approved sediment trapping device.
9. Periodic inspection and needed maintenance shall be provided after each rain.

SYMBOL CALLOUT

WD

VEHICLE WASHDOWN AREA

N.T.S.

MAINTENANCE

1. Filter barriers shall be inspected immediately after each rainfall and at least daily during prolonged rainfall. Any required repairs shall be made immediately.
2. Should the fabric decompose or become ineffective prior to the end of the expected usable life and the barrier still be necessary, the fabric shall be replaced promptly.
3. Sediment deposits should be removed after each storm event. They must be removed when deposits reach approximately half the height of the barrier.
4. Any sediment deposits remaining in place after the silt fence or filter barrier is no longer required shall be dressed to conform with the existing grade, prepared and seeded.

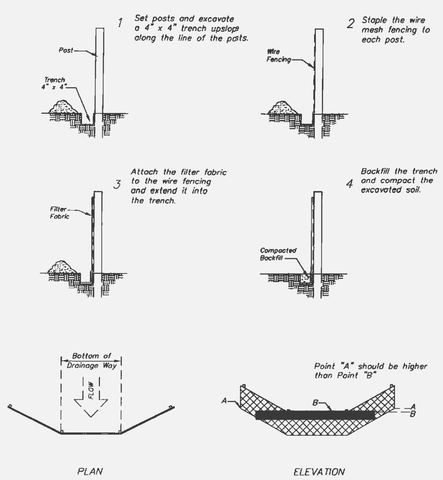

Placement and Construction of a Synthetic Filter Barrir

APPENDIX D

For Urban Development Sites

SYMBOL CALLOUT

SFB

SYNTHETIC FILTER BARRIERS

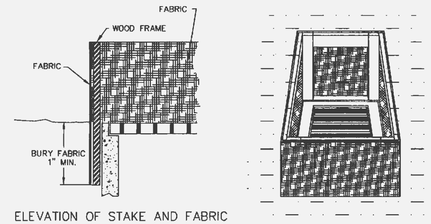

ELEVATION OF STAKE AND FABRIC

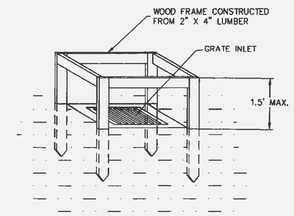

SYMBOL CALLOUT

SFIP

SILT FENCE INLET PROTECTION

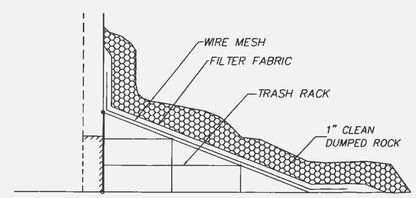

SECTION A-A

N.T.S.

NOTE: LOW FLOW ORIFICE TO BE BLOCKED WITH WIRE MESH OVER TRASH RACK, THEN PLACE FILTER FABRIC AROUND STANDPIPE, AND TRASH RACK. DUMP 1" CLEAN ROCK UP TO TOP OF TRASH RACK.

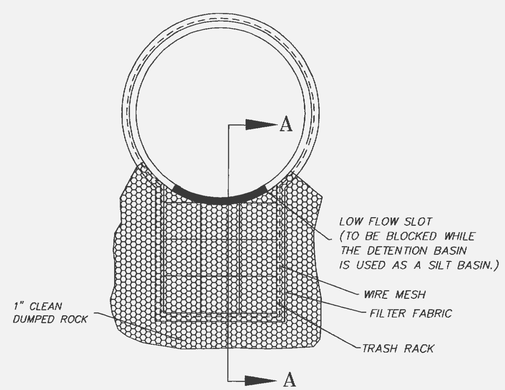

OUTFALL STRUCTURE PLAN VIEW

SCALE: NONE

SEDIMENT BASIN OUTFALL DETAIL

APPENDIX A

Seeding Rates:

Permanent:

Tall Fescue - 30 lbs./ac.
Smooth Brome - 20 lbs./ac.
Combined: Fescue @ 15 lbs./ac. and Brome @ 10 lbs./ac.

Temporary:

Wheat or Rye - 150 lbs./ac. (3.5 lbs. per 1,000 square feet)
Oats - 120 lbs./ac. (2.75 lbs. per 1,000 square feet)

Seeding Periods:

Fescue or Brome - March 1 to June 1
August 1 to October 1

Wheat or Rye - March 15 to November 1
Oats - March 15 to September 15

Mulch rates: 100 lbs. per 1,000 sq. ft. (4,356 lbs. per acre)

Fertilizer rates: Nitrogen 30 lbs./ac.
Phosphate 30 lbs./ac.
Potassium 30 lbs./ac.
Lime 600 lbs./ac. ENM*

*ENM = effective neutralizing material as per State evaluation of quarried rock.

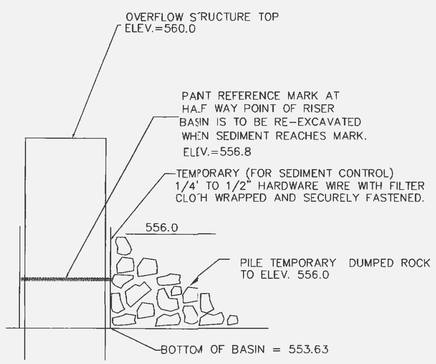

OUTFALL STRUCTURE SCHEMATIC SUMMARY

SCALE: NONE

SILTATION CONTROL NOTES

1. Installation of all sediment and erosion control shall be implemented as the first step of grading and within seven (7) days of grubbing.
2. Inspection of siltation control shall take place at least once every seven (7) days and within 24 hours of any rain event. Any repairs required shall begin immediately.
3. A Missouri State Operating Permit that sprecifically indentifies the site must be obtained from the Missouri Department of Natural Resources prior to any clearing, grubbing or grading that results in destruction of the root zone.
4. The contractor shall keep and maintain records of all siltation control inspections, repairs, installation or relevant activities on the jobsite or main office for a period of three years. These records shall be available for inspection by Missouri Department of Natural Resources or local authorities having jurisdiction.
5. All disturbed areas which remain unworked for 14 days or more shall be stabilized with seeding and mulching per appendix A or per the project specifications whichever is more stringent. If seasonal conditions prohibit seeding or mulching, matting shall be installed
6. All slopes or drainage channels, once constructed to final grade shall be seeded and mulched or otherwise stabilized within 7 days. Every effort shall be made to prevent erosion in these areas.
7. Silt fences inlet protection devices shall be installed immediately around each inlet once inlet construction is completed.
8. All siltation control devices shall remain in place until upslope areas have been permanently stabilized.

STRAW BALE SILTATION CONTROL SPECIFICATIONS

Sheet Flow Applications:

1. Bales shall be placed in a single row, lengthwise on the contour, with both ends of adjacent bales tightly abutting one another.
2. All bales shall either be wire bound or string tied. Straw bales shall be installed so that the bindings are oriented around the sides rather than along the tops and bottoms of the bales to prevent deterioration of the bindings.
3. The barrier shall be entrenched and backfilled. A trench shall be excavated the width of the bale and the length of the barrier a minimum of 6 inches. After the bales are staked and chinked, the excavated material shall be backfilled against the barrier. Backfill soil shall conform to the ground level on the downhill side and shall be built up to 4 inches against the uphill side.
4. Each bale shall be secuely anchored by at least two stakes driven through bale. The first stake in each bale shall be driven toward the previously laid bale to force the bales together. Stakes shall be driven deep enough into the ground to secuely anchor the bales.
5. The gaps between the bales shall be chinked with straw to prevent water from escaping between the bales. Loose straw scattered over the area immediatley uphill from a straw bale barrier tends to increase barrier efficiency.
6. Inspection shall be frequent and repair or replacement shall be made as promptly as needed.
9. Straw bale barriers shall be removed when they have served their usefullness but not before upslope areas have been stabilized.

Straw Bale Maintenance:

1. Straw bales shall be inspected immediately after each rainfall and at least daily during prolonged rainfall.
2. Close attention shall be paid to the repair of damaged straw bale barriers, end runs and barrier undercutting.
3. Should straw bales decompose or become ineffective prior to the end of construction and are still necessary, the straw bales shall be promptly replaced.
4. Sediment deposits shall be removed after each rainfall. They must be removed when the level of deposition reaches approximately one - half of the height of the barrier.
5. Any sediment deposits remaining in place after the straw bale barrier is no longer required shall be dressed to conform to the existing grade, prepared and seeded.

Synthetic Filter Barrier Specifications (Silt Fence):

1. Silt fence shall be wooven geotextile fabric Mirafi 100X or equal.
2. Fabric shall be entrenched and backfilled. A trench shall be excavated a minimun of 6 inches deep for the length of the fence. The excavated material shall be backfilled against the fence.
3. Fence height shall be a minimun of 2 feet above grade, with fabric installed along the contour and on the upslope side of the stakes.
4. Silt fence shall be used only on sheet flow conditions.
5. Silt fences shall be installed around all storm sewer structures.

Silt Fence Maintenance:

1. Silt fence shall be inspected immediately after each rainfall and at least daily during prolonged rainfall.
2. Close attention shall be paid to the repair of damaged silt fence barriers, end runs and barrier undercutting.
3. Should silt fence become ineffective prior to the end of construction and are still necessary, the straw bales shall be promptly replaced.
4. Sediment deposits shall be removed after each rainfall. They must be removed when the level of deposition reaches approximately one - half of the height of the fence.
5. Any sediment deposits remaining in place after the silt fence barrier is no longer required shall be dressed to conform to the existing grade, prepared and seeded.

P&Z APPROVAL 10.05.06
FILE #2606.01

PICKETT RAY & SILVER
CIVIL ENGINEERS
PLANNERS
LAND SURVEYORS
333 Mid Rivers Mall Drive
St. Peters, MO 63376
Phone (636) 397-1211
Fax (636) 397-1104

SSM HEALTHCARE IMPROVEMENT PLANS OFALLON, MO

Prepared For: LILLIBRIDGE

LILLIBRIDGE
CONTACT: NOE MARTINEZ
5308 WEST PLANO PARKWAY
PLANO, TEXAS 75093-4821
972-248-3100 EXT. 3360

REVISIONS		
NO.	DATE	
1	10.19.06	REVISED PER CITY COMMENTS

ENGINEERS AUTHENTICATION
The responsibility for professional engineering liability on this project is hereby limited to the set of plans authenticated by the seal, signature, and date hereunder attached. Responsibility is disclaimed for all other engineering plans involved in this project and specifically excludes revisions after this date unless reauthenticated.
PICKETT RAY & SILVER, INC
STATE OF MISSOURI STEVE MARION NUMBER PE2004017194 PROFESSIONAL ENGINEER

DRAWN	DATE
J.M. WINTERS	10.11.06
CHECKED	DATE
S.D.MARION	10.11.06

PROJECT # 91090.LILB.02C
TASK # 2 FIELD BOOK 450E

SSM HEALTHCARE IMPROVEMENT PLANS
SEDIMENT AND EROSION CONTROL DETAILS

SHEET 10 OF 10

© Copyright 2006 by Pickett, Ray & Silver Inc.

\\3serverps\Projects\91090.LILB\dwg\91090 DES 10-10-06.dwg, 10/19/2006 10:06:14 AM, JUSTIN WINTERS