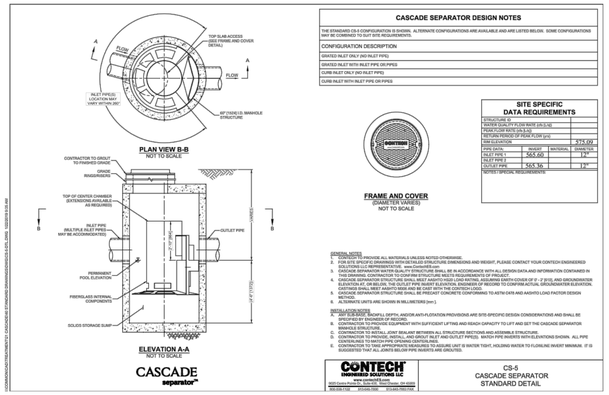

FOR REVIEW PURPOSES ONLY. REFER TO ARCHITECTURAL PLANS FOR ACTUAL DETAIL OF TRASH ENCLOSURE TO BE CONSTRUCTED

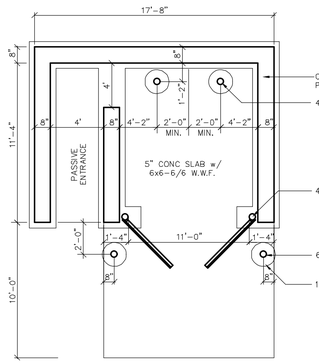

DUMPSTER ENCLOSURE PLAN

N.T.S.

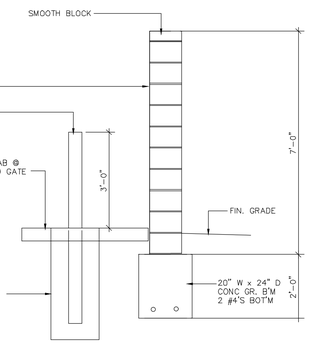

SECTION

N.T.S.

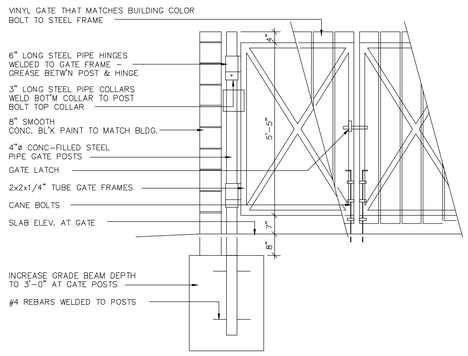

GATE ELEVATION

N.T.S.

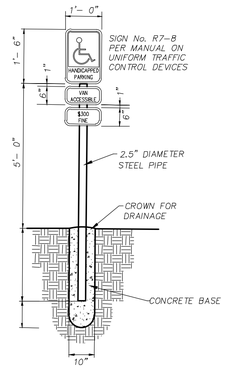

HANDICAPPED SIGN DETAIL

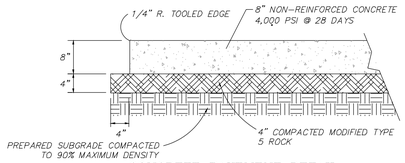

CONCRETE PAVEMENT DETAIL

N.T.S.

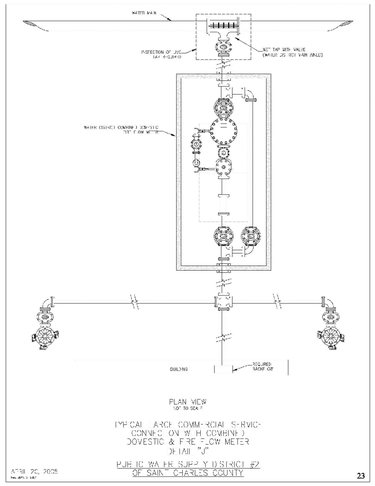

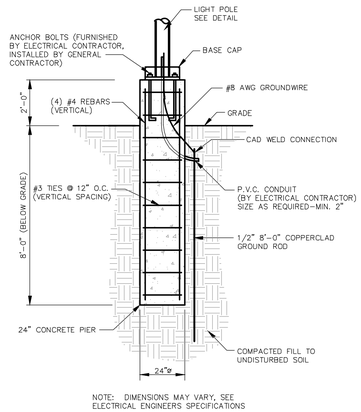

LIGHT POLE BASE DETAIL

N.T.S.

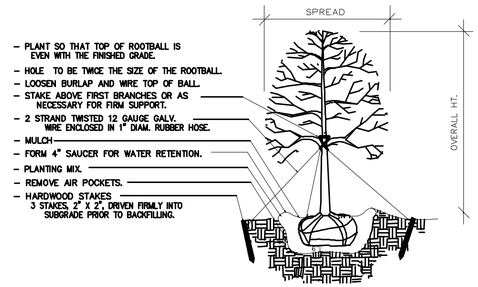

L3.1-01 TREE STAKING/PLANTING DETAIL

N.T.S.

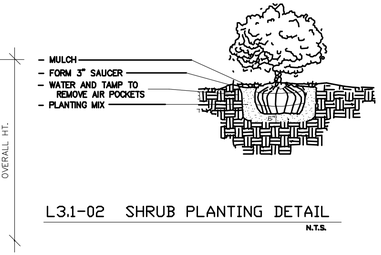

L3.1-02 SHRUB PLANTING DETAIL

N.T.S.

LANDSCAPE NOTES

- FINAL TREE SELECTION AND LOCATIONS SHALL BE SHOWN ON THE CONSTRUCTION PLANS.
- ALL TREES SHALL BE PLANTED PER SECTION 402.130 – TREE PLANTING STANDARDS – OF THE CITY OF O'FALLON MUNICIPAL CODE.
- DECIDUOUS TREES SHALL BE A MINIMUM OF 2" CALIPER AT TIME OF PLANTING.
- CONIFEROUS TREES SHALL BE A MINIMUM OF 6' IN HEIGHT AT TIME OF PLANTING.

"INVERTED U" BIKE RACK

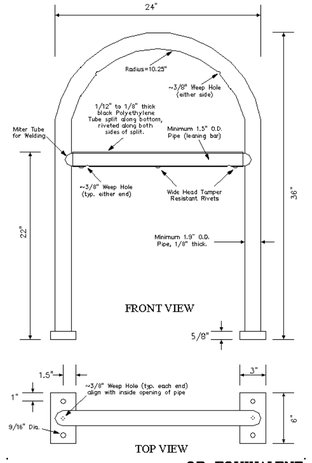

OR EQUIVALENT

Note:
Bicycle rack shall meet or exceed Bicycle USA Requirements.

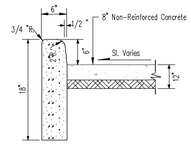

PAVEMENT DETAIL WITH 6" VERTICAL CONCRETE CURB DETAIL

N.T.S.

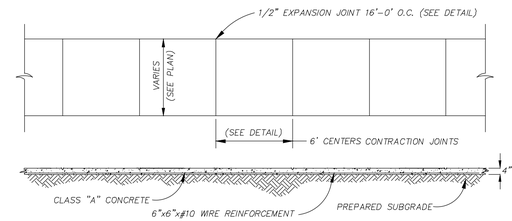

CONCRETE SIDEWALK

N.T.S.

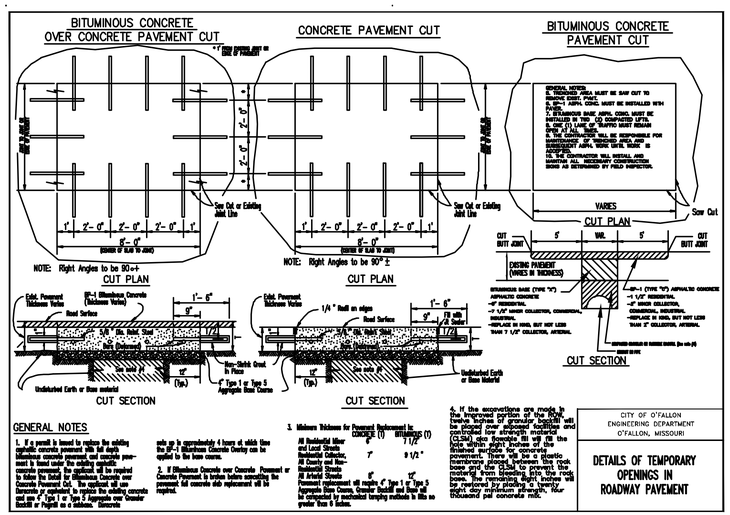

NOTE: ACCESS LIDS TO BE CAST IRON

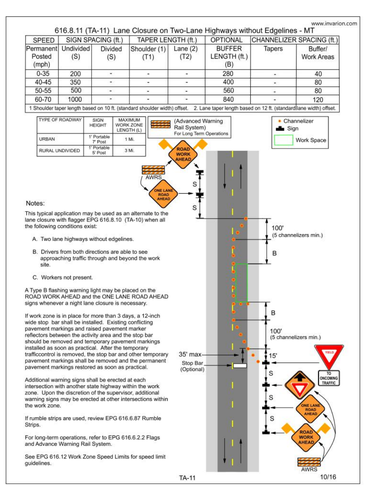

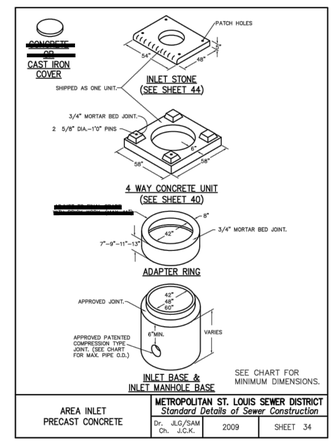

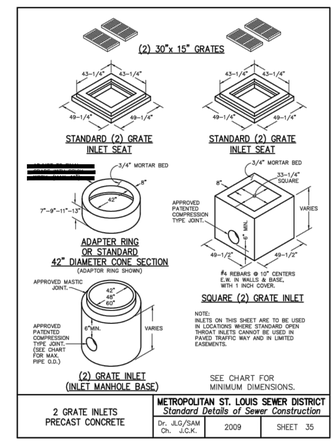

NOTE: ACCESS LIDS TO BE CAST IRON

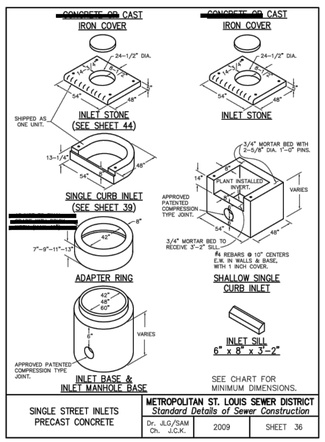

PROJECT TITLE
IMPROVEMENT PLANS
STL WHOLESALE
DETAILS

PRS No. 86155PPRO.001
TASK 003

St. Peters
22 Richmond Center Court
St. Peters, MO 63376
Phone (636) 397-1211
Fax (636) 397-1104
www.prss.com

Pickett Ray & Silver
Civil Engineering & Land Surveying
Beyond Standard

ENGINEERS AUTHENTICATION
THE RESPONSIBILITY FOR PROFESSIONAL ENGINEERING LIABILITY ON THIS PROJECT IS HEREBY LIMITED TO THE SET OF PLANS AUTHENTICATED BY THE SEAL, SIGNATURE, AND DATE HEREUNDER ATTACHED. RESPONSIBILITY IS DISCLAIMED FOR ALL OTHER ENGINEERING PLANS INVOLVED IN THIS PROJECT AND SPECIFICALLY EXCLUDES REVISIONS AFTER THIS DATE UNLESS REAUTHENTICATED.
PICKETT, RAY & SILVER, INC. MO
LICENSE #000325

STATE OF MISSOURI
WILLIAM SCHEIDT
NUMBER PE-2018007869
PROFESSIONAL ENGINEER

*** 2021/11/18 ***

Developer / Owner Information
Pinkerton Properties LLC
801 Texas Court
O'Fallon, Missouri 63366

P+Z No.
21-003918
City No.

Approved 06-03-2021

Page No.
11 of 12

P:\86155 PPRO 001 - St LOUIS WHOLESALE\DWG\OUTPUT\improvement Plans\01 COVER SHEET - NOTES - DETAILS.dwg