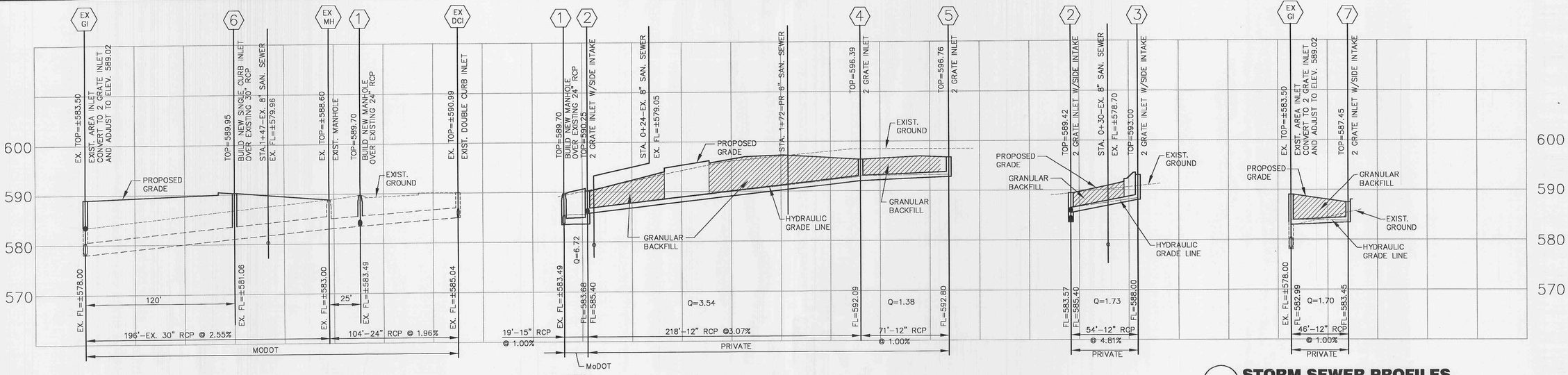

NOTES:
1. A 0.20 FOOT DROP SHALL BE PROVIDED THROUGH ALL STRUCTURES AND MANHOLES
2. COMPACTED ROCK BACKFILL IF REQUIRED IN THE DISTURBED GROUND AROUND ALL ALL SEWER STRUCTURES (DROP AND NON-DROP STRUCTURES).

9 STORM SEWER PROFILES

SCALE: 1"=40'H.-1"=10'V. REF. DWG. C6.0

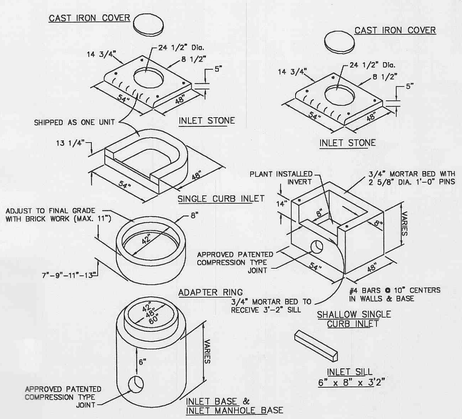

6 SINGLE CURB INLET DETAIL

SCALE: N.T.S. REF. DWG. C6.0

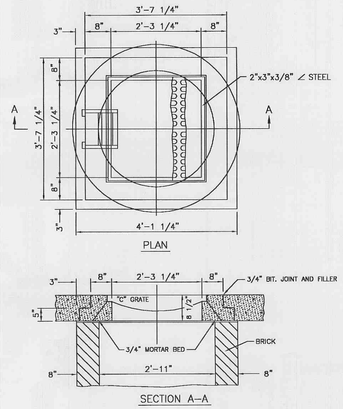

4 2-GRATE INLET DETAIL

SCALE: N.T.S. REF. DWG. C6.0

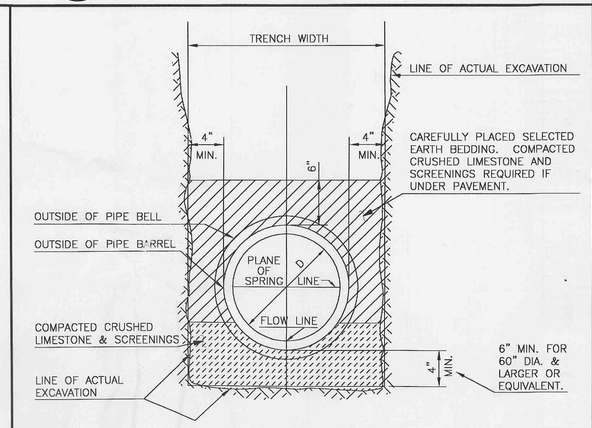

2 PIPE BEDDING DETAIL (RCP)

SCALE: N.T.S. REF. DWG. C6.0

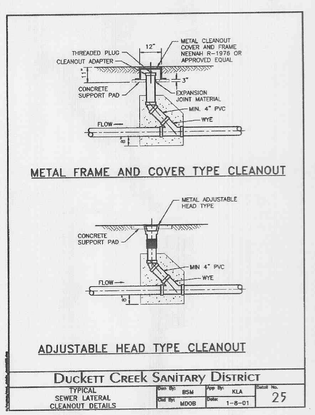

7 CLEANOUT DETAIL (D.C.S.D.#25)

SCALE: N.T.S. REF. DWG. C6.0

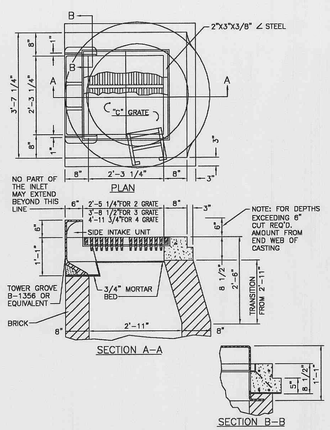

5 2-GRATE INLET W/SIDE INTAKE

SCALE: N.T.S. REF. DWG. C6.0

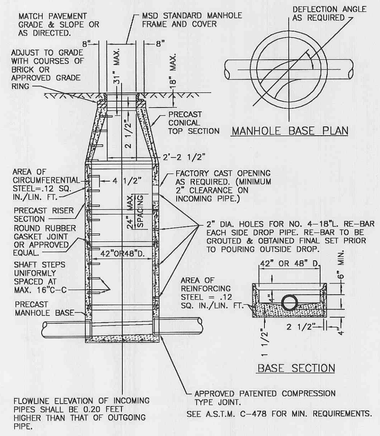

3 MANHOLE DETAIL

SCALE: N.T.S. REF. DWG. C6.0

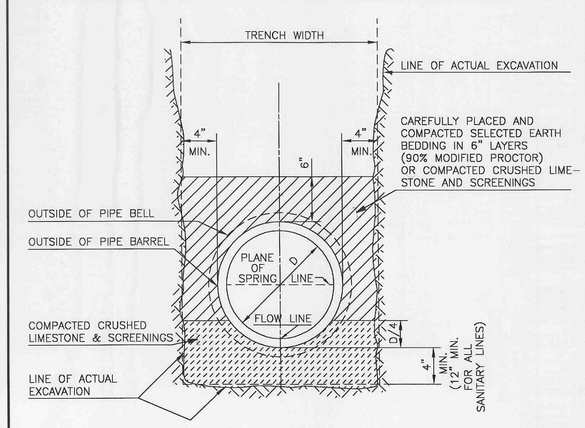

1 PIPE BEDDING DETAIL (PVC)

SCALE: N.T.S. REF. DWG. C6.0

FILE # 9831.41

REVISIONS

	DATE	DESC.
1	3/30/04	CITY REVIEW COMMENTS
2	4/2/04	REVISED PROFILE
3	4/12/04	MODOT & CITY COMMENTS
4	5/10/04	REVISED SANITARY LATERAL LOCATION
5	5/25/04	REV. STORM PROFILE
6	5/26/04	REVISED PROPOSED PROPERTY LINE LOCATION

DEVELOPER/OWNER:
MCEAGLE DEVELOPMENT COMPANY
1001 BOARDWALK SPRINGS PLACE
O'FALLON, MO 63366
636-561-9300

THE PROFESSIONAL WHOSE SIGNATURE AND PERSONAL SEAL APPEAR HEREON HAS PREPARED THIS DOCUMENT ONLY FOR THE PLANS AND SPECIFICATIONS ON THIS PLAN PAGE (PURSUANT TO SECTION 327.411 RSMo) ANY RESPONSIBILITY FOR ALL OTHER PLANS, SPECIFICATIONS, ESTIMATES, REPORTS, OR OTHER DOCUMENTS OR INSTRUMENTS NOT SEALED, DATED AND SIGNED BY THE PROFESSIONAL WHOSE SEAL APPEARS HEREON IS NOT ASSUMED FOR, ANY PART OR PARTS OF THE PROJECT TO WHICH THIS PAGE REFERS.

SEAL:

STATE OF MISSOURI
JAMES T. ROTH
NUMBER E-2000103000
REGISTERED PROFESSIONAL ENGINEER

SHOPPES AT WINGHAVEN

SEWER PROFILES AND DETAILS

Cole & Associates Inc.
Planning • Civil Engineering – Land Surveying
10777 Sunset Office Drive, Suite 10
St. Louis, MO 63127 (314) 984-9887 FAX: 984-0587
Email: info@colesti.com

DESIGNED BY	JF
DRAWN BY	JF
CHECKED BY	JTR
DATE	02/13/04
Job Number	03-303
Sheet Number	C7.0