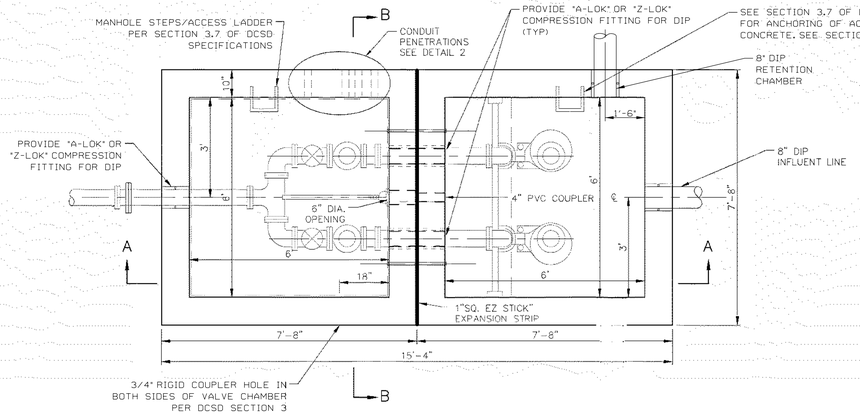


## WET WELL AND VALVE CHAMBER PLAN
N.T.S.

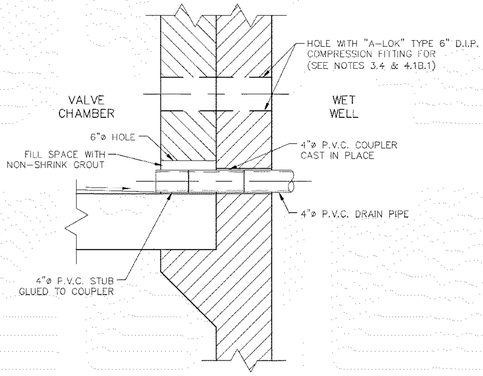


## DETAIL 3
N.T.S.

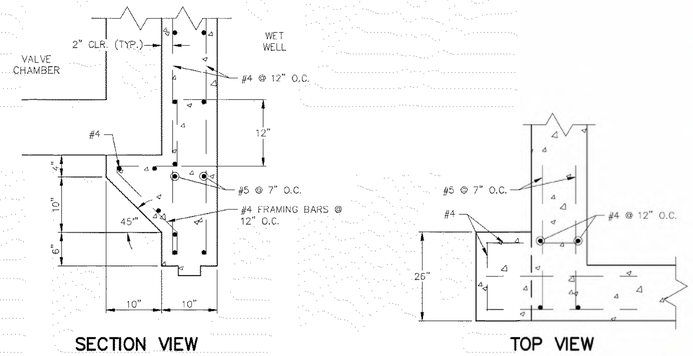


## CORBEL DETAIL
N.T.S.

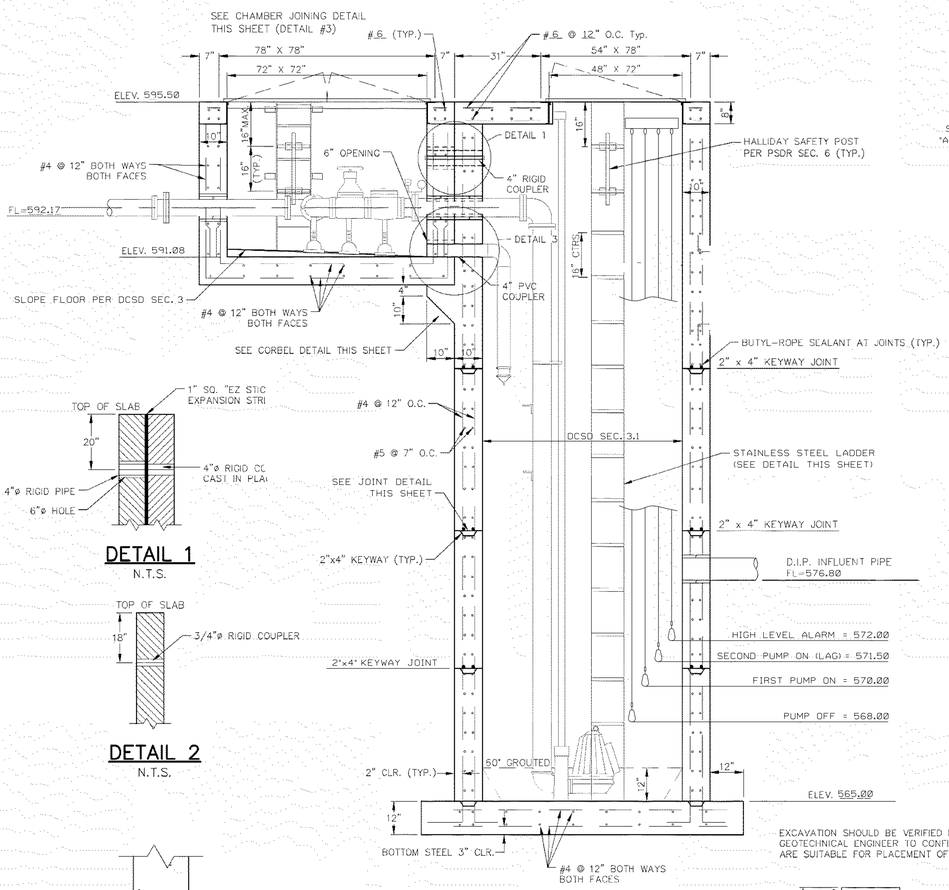


## SECTION A–A
N.T.S.

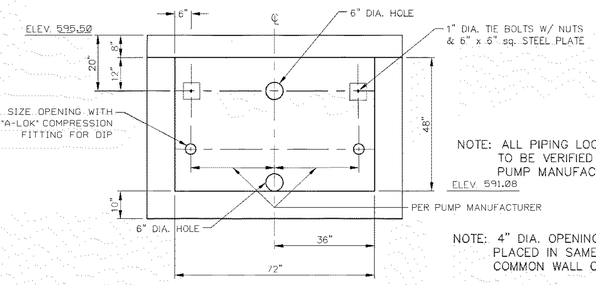


NOTE: 4" DIA. OPENINGS TO BE PLACED IN SAME LOCATION ON COMMON WALL OF WET WELL

## SECTION "B–B" VALVE CHAMBER WALL OPENING DETAIL
N.T.S.

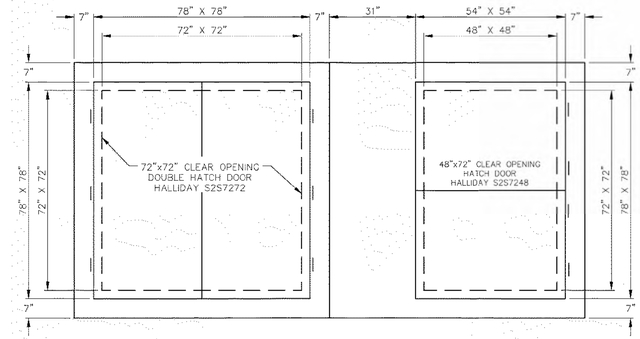


## HATCH LOCATION DETAIL PLAN
N.T.S.




## DETAIL 1
N.T.S.




## DETAIL 2
N.T.S.

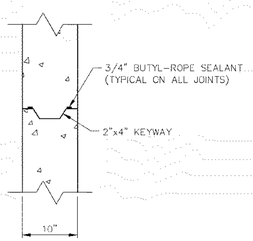


## JOINT DETAIL
N.T.S.

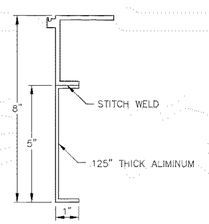


## TYPICAL HATCH FRAME DETAIL
N.T.S.

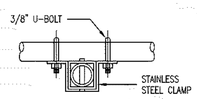


## DETAIL A

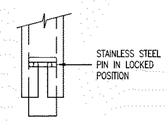


## DETAIL B

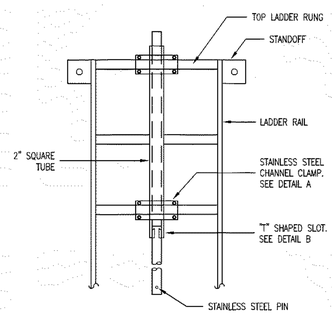


NOTE: SEE SECTION 3.7 OF DUCKETT CREEK SANITARY DISTRICT SPECIFICATIONS

## STAINLESS STEEL LADDER
NTS

REGENRATIVE BLOWER COMPONENT LIST:

CONTRACTOR TO PROVIDE THE FOLLOWING COMPONENTS TO DCSD:

| QTY | |
|---|---|
| 1 | Airtech, Inc. Model 3BA7210-0As7599, 35 CFM Regenerative Blower 0.84HP; 115/230V, 1~phase - 60Hz |
| 2 | EDI Flexair Tube Diffuser, Model 91762 Part #00262; USA Blue Book Stock #32148 |
| 1 | RDM products Con Pak Model PSE-181D Enclosure |
| 1 | 1" Heavy Wall Threaded Stainless Steel Coupler |
| 1 | 1" 90 Degree Stainless Steel Elbow |
| 1 | 1" Stainless Steel Close Nipple |
| 1 | 1" Stainless Steel Male Thread x Hose Barb Adapter |
| 8 | Stainless Steel Hose Clamps for 1" Hose |
| 35 | Feet of Silicone Rubber Heater Hose |
| 1 | 1" x 1 1/4" Galvanized Bushing |
| 1 | 1 1/4" Galvanized Street Ell |
| 1 | 1" Galvanized Male Thread x Hose Barb Adapter |
| 1 | 1" 90 Degree Elbow |
| 1 | 14 Gauge Outdoor Type 6 foot Extension Cord |

DISTRICT PERSONNEL WILL ASSEMBLE AND INSTALL COMPONENTS AS NEEDED.


McKELVEY HOMES
Building A Tradition Of Excellence Since 1898
216 Chesterfield Towne Center
Chesterfield, MO 63005
Phone: (636) 530-6900

VOLZ Incorporated
ENGINEERING LAND PLANNING LAND SURVEYING ENVIRONMENTAL CONSULTING CONSTRUCTION MANAGEMENT
10849 Indian Head Ind'l. Blvd.
St. Louis, Missouri 63132
314.428.5212 Main
314.428.5215 Fax
www.volzinc.com
Authority #203


STATE OF MISSOURI
RYAN LEE HOLMES
NUMBER
PE-2017018988
PROFESSIONAL ENGINEER
06-29-21
RYAN L. HOLMES
Professional Engineer
PE-2017018988

# SOMMERLIN

PUMP STATION DETAILS: SHEET 1

Design By: RLH
Drawn By: RLH
Checked By: RLH
Volz Project # 22074

06-28-21
C48.0

O'fallon Planning and Development Division File No.: 20-005554 | Approved: January 7, 2021

H:\CAD\22000-22999\22074\VmpPlans\22074 - C48.0 Pump Station Details Sheet 1.dgn - Default 6/30/2021 8:34:17 AM Plotted by: rholmes Plot Scale 10.0000 / in. Plot Driver: volz15.pdf.pltcfg Pen Table: Volz15.PDF.tbl