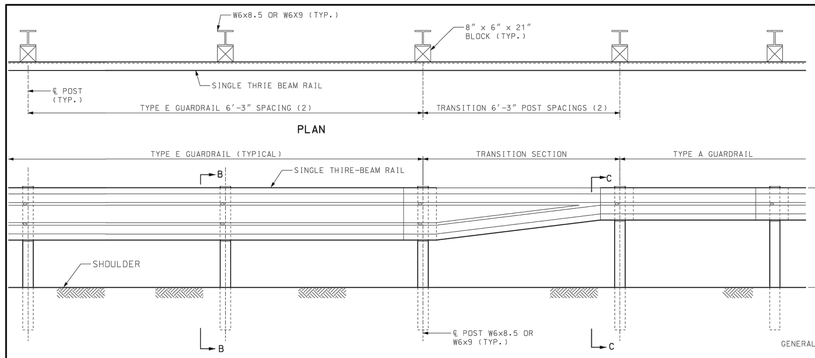


PART SECTION SHOWING TYPE E TO TYPE A GUARDRAIL TRANSITION

(1) THE CONTRACTOR MAY FURNISH EQUIVALENT SECTIONS FABRICATED FROM MATERIAL MEETING AND IN ACCORDANCE WITH SEC 1040.

(2) IF THE TRANSITION IS CONNECTED TO A BRIDGE ANCHOR SECTION, POST SPACING FOR TYPE E GUARDRAIL AND THE TRANSITION SECTION SHALL BE 3'-1½" - FOR ALL OTHER CASES, POST SPACING SHALL BE 6'-3".

(3) TRANSITION FROM 31" TO 29" HEIGHT OVER 2-12.5' W-BEAMS OR 25'.

THE OVERALL NOMINAL DIMENSIONS SHOWN SHALL BE MET, ALTHOUGH THE SHAPE OF THE PLASTIC BLOCKS MAY VARY FROM THE SHAPE SHOWN, EXCEPT THE ⅜" + ¼" FLANGE AND THE OVERALL WIDTH DIMENSIONS MAY BE WAIVED IF APPROVED BY PROJECT OPERATIONS.

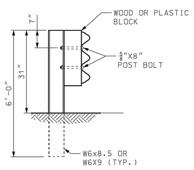


SECTION B-B

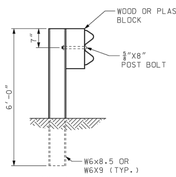


SECTION C-C

GENERAL NOTES:

TYPE E GUARDRAIL SHALL USE 6'-3" POST SPACING UNLESS 3'-1½" POST IS SPECIFIED.

THE THRIE BEAM RAIL FOR THE TYPE E GUARDRAIL AND THE TRANSITION SECTION SHALL BE MADE OF STEEL AND SHALL BE 12 GAGE.

FOR PROTECTIVE COATING AND MATERAL REQUIREMENTS, SEE SEC 1040 OF THE STANDARD SPECIFICATIONS.

SEE SHEET 7 OF 7 FOR REQUIREMENTS FOR SPECIAL INSTALLATIONS.

ALL DIMENSIONS ARE SUBJECT TO MANUFACTURING TOLERANCES EXCEPT WHERE ALLOWABLE TOLERANCES ARE SHOWN.

FOR DETAILS NOT SHOWN, SEE OTHER SHEETS OF THIS DRAWING.

MISSOURI HIGHWAYS AND TRANSPORTATION COMMISSION
105 WEST CAPITOL
JEFFERSON CITY, MO 65102
1-888-ASK-MODOT (1-888-275-6636)

STATE OF MISSOURI ERIC E SCHROETER NUMBER PE-2004020031 PROFESSIONAL ENGINEER
THIS SHEET HAS BEEN SIGNED, SEALED AND DATED ELECTRONICALLY

GUARDRAIL
TYPE E

| DATE EFFECTIVE: 01/01/2017 | 606.00AY | SHEET NO. 2 OF 7 |
|---|---|---|
| DATE PREPARED: 10/28/2016 | | |

IF A SEAL IS PRESENT ON THIS SHEET IT HAS BEEN ELECTRONICALLY SEALED AND DATED.

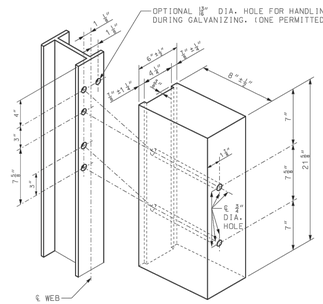


TYPE E
FOR STEEL POST & WOOD OR PLASTIC BLOCKS (1)

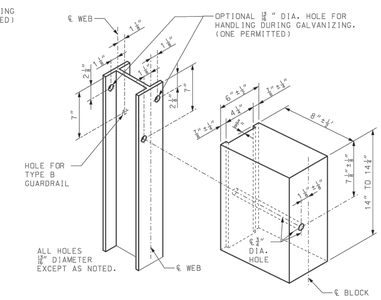


TYPE A AND TYPE B
FOR STEEL POST AND WOOD OR PLASTIC BLOCKS (1)

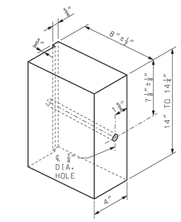


ALTERNATE DESIGN
FOR WOOD BLOCK

(1) THE OVERALL NOMINAL DIMENSIONS SHOWN SHALL BE MET, ALTHOUGH THE SHAPE OF THE PLASTIC BLOCKS MAY VARY FROM THE SHAPE SHOWN, EXCEPT THE ⅜" +¼" FLANGE AND THE OVERALL WIDTH DIMENSIONS MAY BE WAIVED IF APPROVED BY PROJECT OPERATIONS.

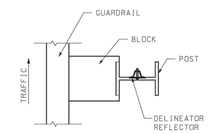


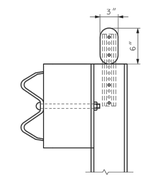


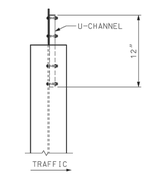


DELINEATORS ON NEW GUARDRAIL

GENERAL NOTES:

FOR GUARDRAIL DELINEATION DETAILS SEE STD PLAN 903.03.

MISSOURI HIGHWAYS AND TRANSPORTATION COMMISSION
105 WEST CAPITOL
JEFFERSON CITY, MO 65102
1-888-ASK-MODOT (1-888-275-6636)

STATE OF MISSOURI ERIC E SCHROETER NUMBER PE-2004020031 PROFESSIONAL ENGINEER
THIS SHEET HAS BEEN SIGNED, SEALED AND DATED ELECTRONICALLY

GUARDRAIL
POST AND BLOCK

| DATE EFFECTIVE: 04/01/2018 | 606.00AY | SHEET NO. 4 OF 7 |
|---|---|---|
| DATE PREPARED: 2/9/2018 | | |

IF A SEAL IS PRESENT ON THIS SHEET IT HAS BEEN ELECTRONICALLY SEALED AND DATED.

TOP VIEW

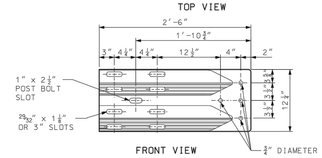


FRONT VIEW

TERMIANL CONNECTOR

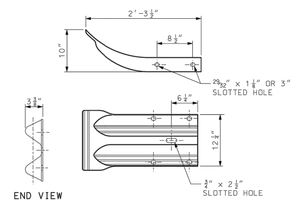


END VIEW

END SECTION
12 GAGE

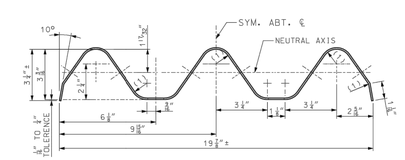


SECTION THROUGH THRIE BEAM RAIL

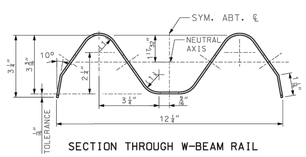


SECTION THROUGH W-BEAM RAIL
(1) 13/16" RADIUS
(2) 2" (TOLERANCE +1¼", -¼")

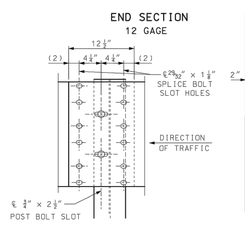


THRIE-BEAM SPLICE AT POST

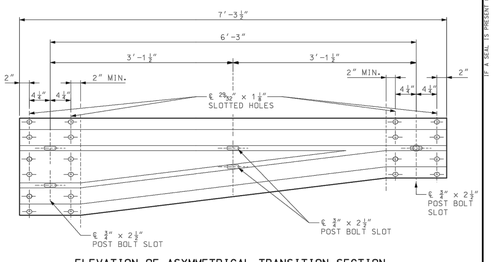


ELEVATION OF ASYMMETRICAL TRANSITION SECTION

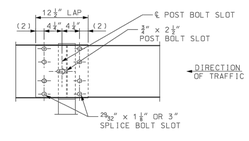


W-BEAM RAIL SPLICE AT POST

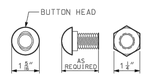


OVAL SHOULDER SHALL BE OF ADEQUATE HEIGHT, LENGTH & SHAPE TO PREVENT TURNING DURING INSTALLATION OR REMOVAL OF BOLT.

⅝" POST OR SPLICE BOLT

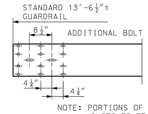


NOTE: PORTIONS OF BEAM WITH UNUSED BOLT SLOTS TO BE LAPPED BEHIND.

BEAM DETAILS SHOWING LOCATION OF ADDITIONAL BOLT SLOTS NECESSARY TO OBTAIN GUARDRAIL OFFSET.

MISSOURI HIGHWAYS AND TRANSPORTATION COMMISSION
105 WEST CAPITOL
JEFFERSON CITY, MO 65102
1-888-ASK-MODOT (1-888-275-6636)

STATE OF MISSOURI ERIC E SCHROETER NUMBER PE-2004020031 PROFESSIONAL ENGINEER
THIS SHEET HAS BEEN SIGNED, SEALED AND DATED ELECTRONICALLY

GUARDRAIL
RAIL ELEMENTS

| DATE EFFECTIVE: 01/01/2017 | 606.00AY | SHEET NO. 5 OF 7 |
|---|---|---|
| DATE PREPARED: 10/28/2016 | | |

IF A SEAL IS PRESENT ON THIS SHEET IT HAS BEEN ELECTRONICALLY SEALED AND DATED.

SRT-350®

TRINITY HIGHWAY
Ahead of the Curve®

## SRT-350®

The Slotted Rail Terminal (SRT-350®) is a gating, flared end terminal and is available in a 6-Post and 8-Post system. The SRT-350® Hinged Breakaway Posts (HBA®) 6-Post system, has 2 steel breakaway posts, 4 wood CRT posts, and is assembled in a straight-line flare. The 6-Post system also has steel breakaway posts that are potentially reusable when impacted within NCHRP Report 350 crash test standards.*

The SRT-350® 8-Post system has 2 tube sleeves/wood posts, 6 wood CRT posts, and installs on a parabolic flare. The parabolic flare has a "footprint" similar to the previously used BCTs and MELTs. Strategically located slots in the W-beam rail design helps to initiate controlled buckling.

TRINITY HIGHWAY

Copyright © 2019 Trinity Highway Products, LLC. All Rights Reserved.

**Assembly and Maintenance**
- 3', 3' 6", and 4' offset (915 mm, 1,070 mm, and 1,220 mm) help reduce installation costs.
- Two HBA® steel breakaway posts are potentially reusable when impacted within NCHRP Report 350 crash test standards.*
- Angle struts designed to help facilitate easier assembly.

**Specifications**
- Offset: 3', 3' 6", and 4' (915 mm, 1,070 mm, and 1,220 mm) SRT-350® 8 Post
  4' (1,220 mm) SRT-350® 6 Post
- Length: 37' 6" (11.43 m)
- Length of Need: 12' 6" (3.81 m) from the Nose of the Terminal (at the 3rd Post)
- Parabolic or Straight Flare Options

SRT-350 6 POST (Straight-line flare)

SRT-350 8 POST (Parabolic flare)

1 Nose
2 Post
3 Rails

Distributed by:

A-19
www.trinityhighway.com
1.888.356.2363

*After an impact, the product must be inspected and evaluated per the direction of the specifying roadway authority. The ultimate decision on reusability rests with the specifying roadway authority and/or state DOT.

PREMIER DESIGN GROUP
100 MIDLAND PARK DRIVE
WENTZVILLE, MO 63385
MISSOURI CERTIFICATE OF AUTHORITY #LC-2006000031
MISSOURI CERTIFICATE OF AUTHORITY #E-2006007949
MISSOURI CERTIFICATE OF AUTHORITY #A-2006007938

ENGINEERS AUTHENTICATION
The responsibility for professional engineering liability on this project is hereby limited to the seal(s) and/or signature(s) affixed to the plans authenticated by the electronic signature, and date hereunder attached. Responsibility is disclaimed for all other engineering plans, reports, and other documents not specifically excludes revisions after this date unless resealed/redated.
STEVEN D. MARION P.E.
PROFESSIONAL ENGINEER
PE 2006007195

Project
SOUTH RIDGE SHOPPES, L.L.C.
OLD HIGHWAY N ROAD IMPROVEMENTS
8298 HWY N
O'FALLON, MO
NEIL KERSTEN
16761 CONCORD HILL
MARTHASVILLE, MO 63357

Date 2-08-2020

| # | Revision Date | Description of Changes |
|---|---|---|

Sheet Title
CONSTRUCTION DETAILS

Sheet Number
C-809

| | |
|---|---|
| Project No. | 168305 |
| Drawn By | A. JONES |
| Checked By | J.WINTERS |

NOT RELEASED FOR CONSTRUCTION

\\Vault-pw\wa\CIVIL 3D PROJECTS\2016\168305 SOUTH RIDGE SHOPPES-O'FALLON TRACT\COMMERCIAL\CONSTRUCTION DRAWINGS\SHEET FILES\CONSTRUCTION DETAILS.dwg