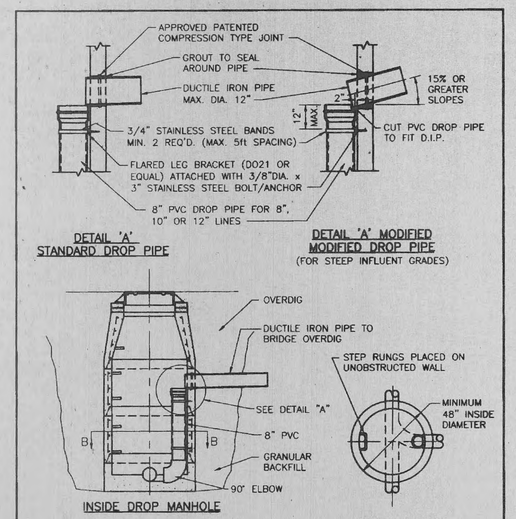

NOTE:
ALL INVERTS SHALL HAVE POSITIVE DRAINAGE THROUGH MANHOLE.

Duckett Creek Sanitary District

INSIDE DROP MANHOLE	Dwn By: BSM	App By: KLA	Detail No.
	Chd By: MDOB	Date: 01-10-00	10

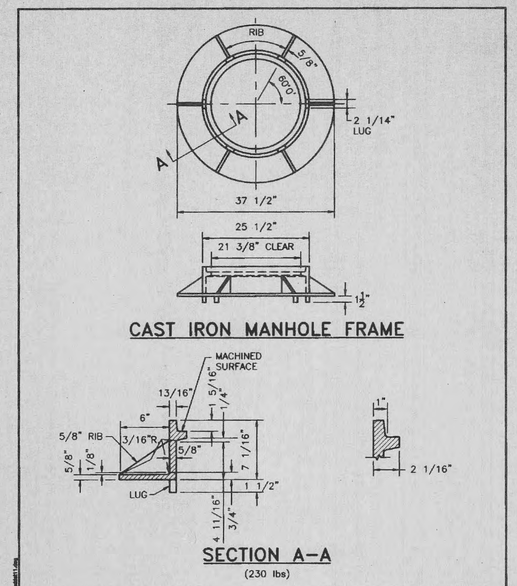

Duckett Creek Sanitary District

CAST IRON MANHOLE FRAME	Dwn By: BSM	App By: KLA	Detail No.
	Chd By: MDOB	Date: 01-14-00	11

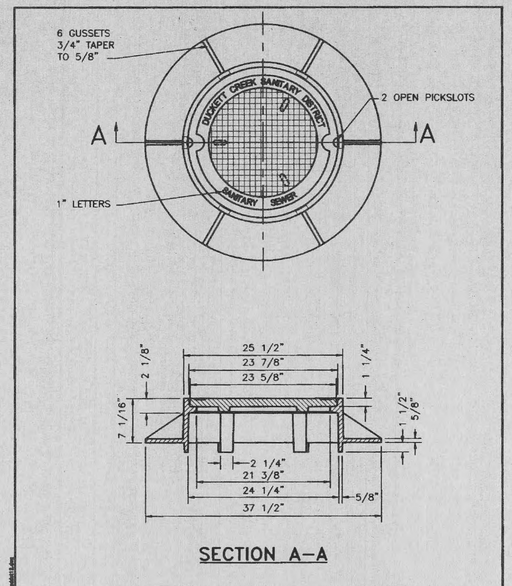

Duckett Creek Sanitary District

MANHOLE FRAME AND COVER	Dwn By: BSM	App By: KLA	Detail No.
	Chd By: MDOB	Date: 01-14-00	12

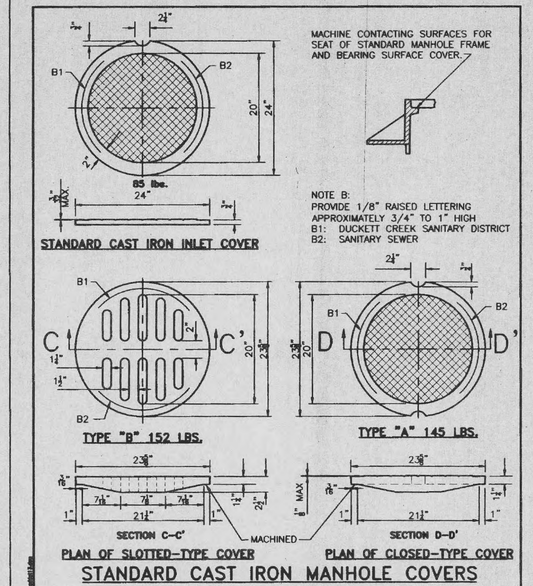

Duckett Creek Sanitary District

CAST IRON COVERS MANHOLES AND INLETS	Dwn By: BSM	App By: KLA	Detail No.
	Chd By: MDOB	Date: 12-22-00	13

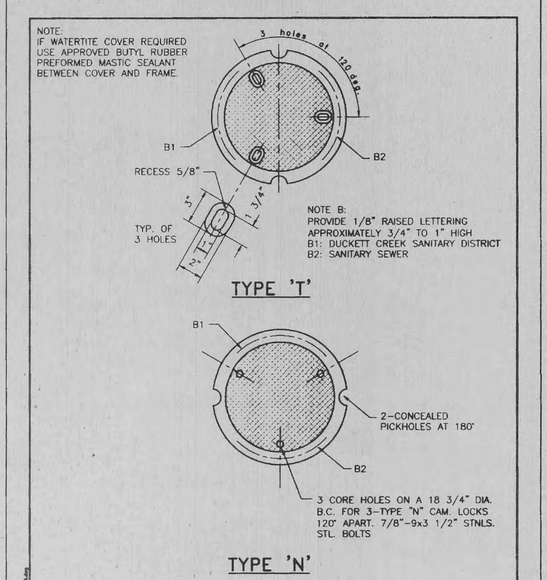

Duckett Creek Sanitary District

CAST IRON MANHOLE COVERS (LOCK TYPE)	Dwn By: BSM	App By: KLA	Detail No.
	Chd By: MDOB	Date: 12-27-00	14

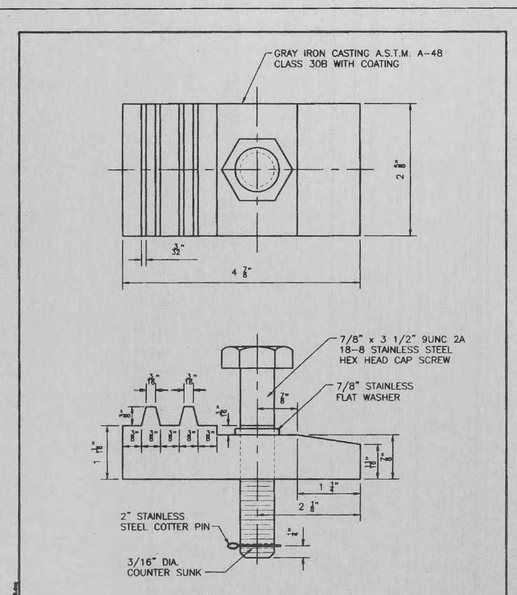

Duckett Creek Sanitary District

LOCKING DEVICE FOR TYPE "T" LOCK TYPE MANHOLE COVER	Dwn By: BSM	App By: KLA	Detail No.
	Chd By: MDOB	Date: 12-27-00	15

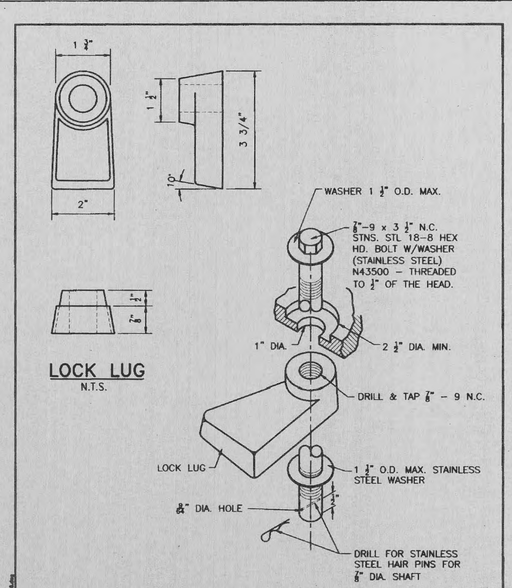

Duckett Creek Sanitary District

LOCKING DEVICE FOR TYPE "N" LOCK TYPE MANHOLE COVER	Dwn By: BSM	App By: KLA	Detail No.
	Chd By: MDOB	Date: 12-28-00	16

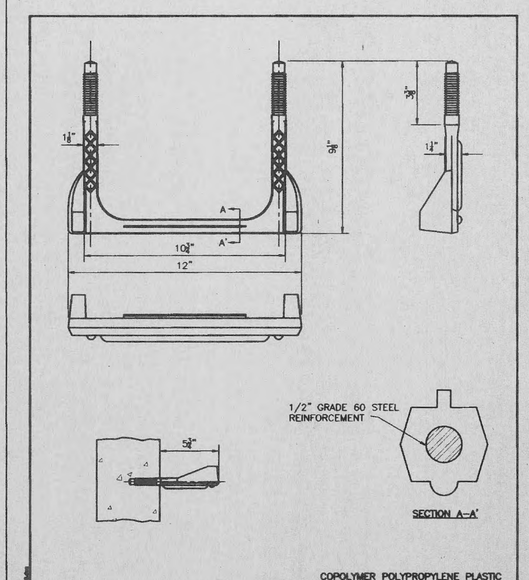

Duckett Creek Sanitary District

MANHOLE STEP PRECAST MANHOLE	Dwn By: BSM	App By: KLA	Detail No.
	Chd By: MDOB	Date: 1-3-01	18

THE UNDERGROUND UTILITIES SHOWN HEREON WERE PLOTTED FROM AVAILABLE INFORMATION AND DO NOT NECESSARILY REFLECT THE ACTUAL EXISTENCE, NONEXISTENCE, SIZE, TYPE, NUMBER OR LOCATION OF THESE OR OTHER UTILITIES. THE GENERAL CONTRACTOR SHALL BE RESPONSIBLE FOR VERIFYING THE ACTUAL LOCATION OF ALL UNDERGROUND UTILITIES, SHOWN OR NOT SHOWN, AND SAID UTILITIES SHALL BE LOCATED IN THE FIELD PRIOR TO ANY GRADING, EXCAVATION OR CONSTRUCTION OF IMPROVEMENTS. THESE PROVISIONS SHALL IN NO WAY ABSOLVE ANY PARTY FROM COMPLYING WITH THE UNDERGROUND FACILITY SAFETY AND DAMAGE PREVENTION ACT, CHAPTER 319, RSMo

BASE MAP N/A

ISSUE	REMARKS/DATE

PREPARED FOR:
N & K HIGHWAYS, L.L.C.
5091 NEW BAUMGARTNER ROAD
ST. LOUIS, MISSOURI 63129
(314) 487-6717

PREPARED BY:
THE STERLING CO.
ENGINEERS & SURVEYORS
5055 NEW BAUMGARTNER ROAD
ST. LOUIS, MISSOURI 63129
(314)-487-0440 FAX 487-8944
E-Mail: Sterling@sterling-eng-sur.com

DRAWN: DESIGNED: CHECKED:

PROJECT: SPRING ORCHARD

SHEET TITLE: DCSD DETAILS

NO.		
01	01	008

M.S.D. P# N/A

SHEET CD6 OF

DIGITAL FILE LOCATION SERVER-STERLING-2