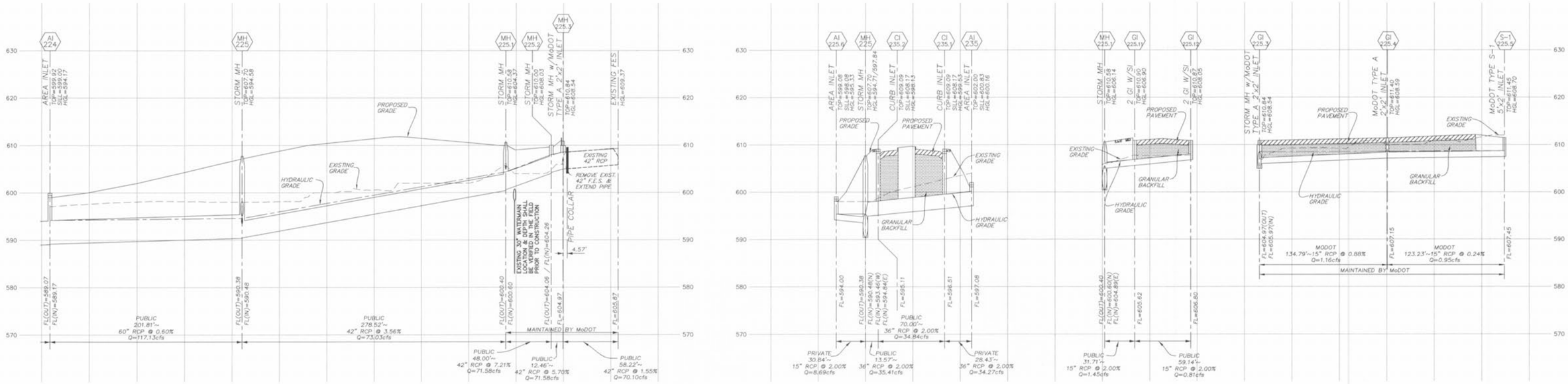

STORM SEWER PROFILES

SCALE: HORIZ. 1"=50'
VERT. 1"=10'

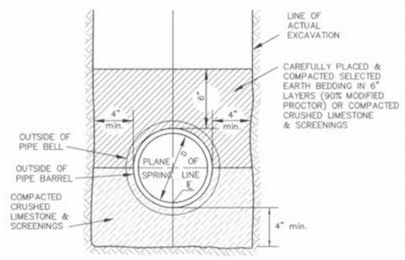

PIPE BEDDING CLASS "C"

(MODIFIED FOR REINFORCED CONCRETE PIPE)

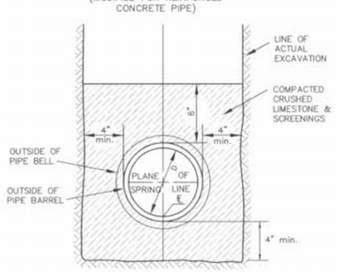

PIPE BEDDING CLASS "C"

(FOR ALL PIPE EXCEPT REINFORCED CONCRETE PIPE)

PIPE BEDDING DETAILS

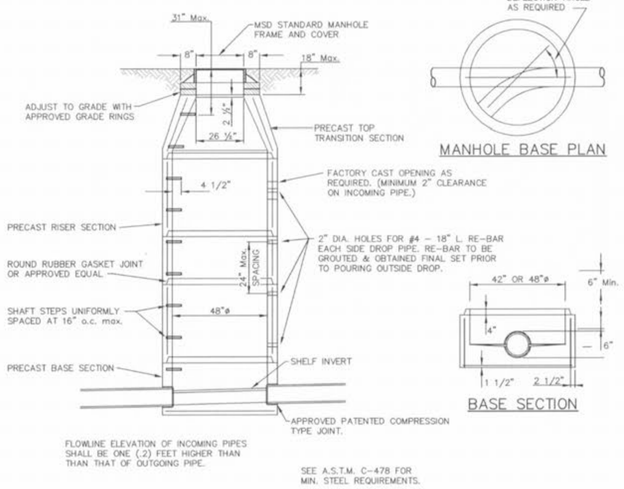

PRECAST MANHOLE DETAIL

(n.t.s.)

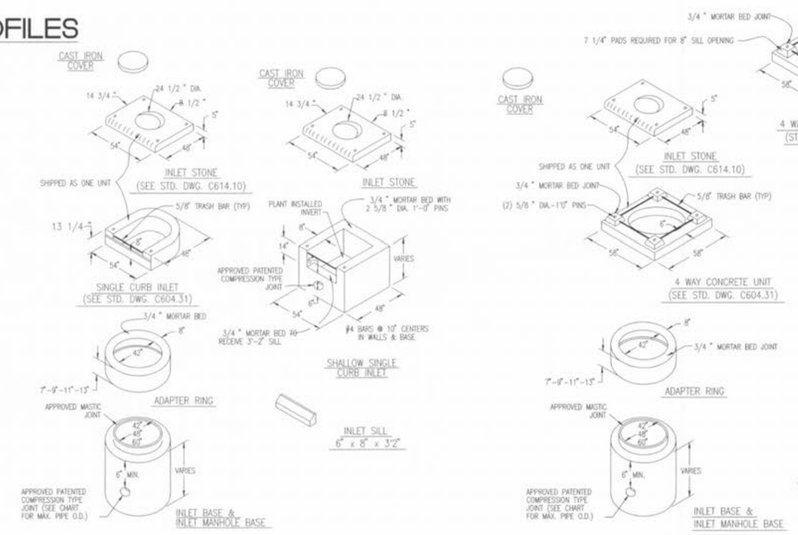

NOTE: INLETS ON THIS SHEET ARE TO BE USED IN LOCATIONS WHERE STANDARD OPEN THROAT INLETS CAN NOT BE USED, IN PAVED TRAFFIC WAY AND IN LIMITED EASEMENTS.

PRECAST CONCRETE STORMWATER STRUCTURES

2 GRATE INLET

(n.t.s.)

NOTE:
PROVIDE A MARKING ON THE STORM SEWER INLETS. THE CITY WILL ALLLOW THE FOLLOWING MARKERS AND ADHESIVE PROCEDURES ONLY AS SHOWN IN THE TABLE BELOW OR AN APPROVED EQUAL BY ALMETEK INDUSTRIES. "PEEL AND STICK" ADHESIVE PADS WILL NOT BE ALLOWED.

Manufacturer	Size	Adhesive	Style	Message (Part #)	Website
ACP International	3 1/2"	Epoxy	Crystal Cap	No Dumping Drains To Waterways (SD-W-CC)	www.acpinternational.com
DAS Manufacturing, Inc.	4"	Epoxy	Standard Style	No Dumping Drains To Stream (#SDS)	www.dasmanufacturing.com

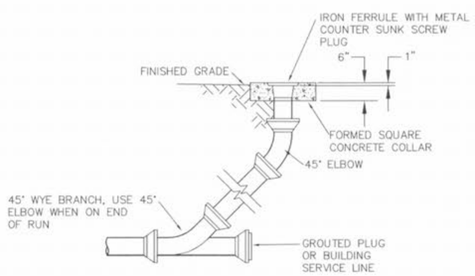

DETAIL OF SEWER CLEANOUT

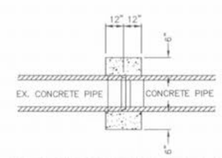

DETAIL OF CONCRETE COLLAR

(n.t.s.)

3 05/02/2006 – REVISED PER CITY & MoDOT COMMENTS
2 04/07/2006 – REVISED PER CITY & MoDOT COMMENTS
1 02/23/2006 – REVISED PER CITY COMMENTS

SPRINGHURST PARKWAY ROAD PLANS

SEWER PROFILES / DETAILS SHEET

STATE OF MISSOURI GEORGE MICHAEL STOCK NUMBER E-25116 REGISTERED PROFESSIONAL ENGINEER 5/9/06

GEORGE M. STOCK E-25116

STOCK & ASSOCIATES Consulting Engineers, Inc.
257 Chesterfield Business Parkway
St. Louis, MO 63005
PH. (636) 530-9100
FAX (636) 530-9130
e-mail: general@stockassoc.com
Web: www.stockassoc.com

DRAWN BY:	DATE:	CHECKED BY:	DATE:	JOB NUMBER:	SHEET:
A.C.D.	12/14/05	D.P.B.	12/14/05	205-3705	C5 of 11