CONSTRUCTION DETAILS

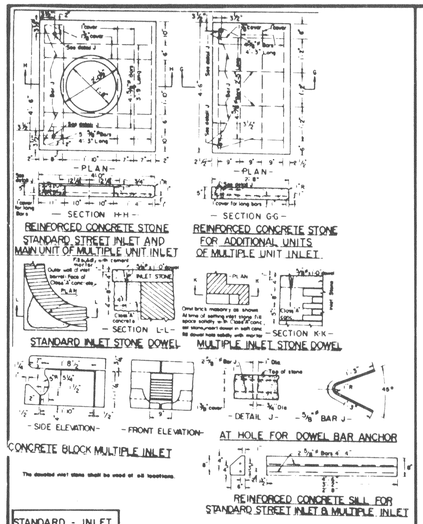

STANDARD - INLET STONES, BLOCKS & DESIGN DETAILS

DETAIL 37

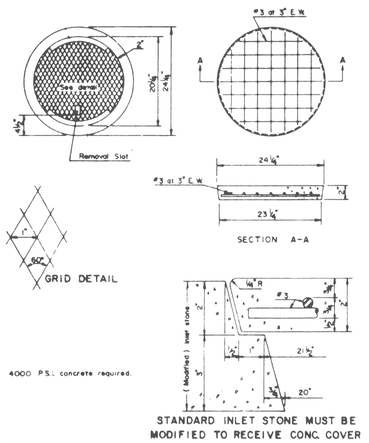

PRE-CAST CONCRETE INLET COVER

DETAIL 38

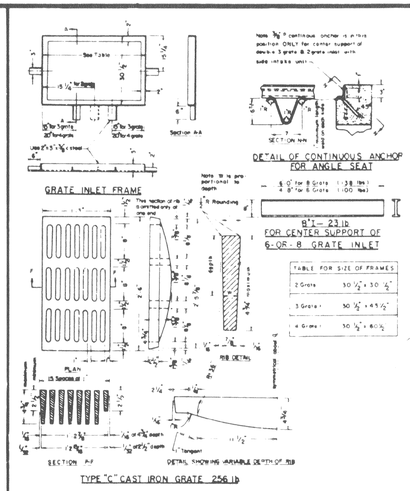

DETAILS OF INLET FRAME AND GRATES

DETAIL 39

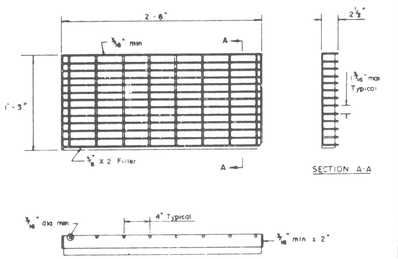

Finish - Asphaltic 10 mil coating
Material - Mild carbon steel - ASTM A 425
Capacity - H-20 loading
Weight - 65 lb. min.
Tolerances - All dimensions ± 1/16"
Identification - The manufacturer must place his name or mark on each unit for the purpose of identification

DETAIL OF STEEL GRATE (ALTERNATE TO CAST IRON "C" GRATE)

DETAIL 40

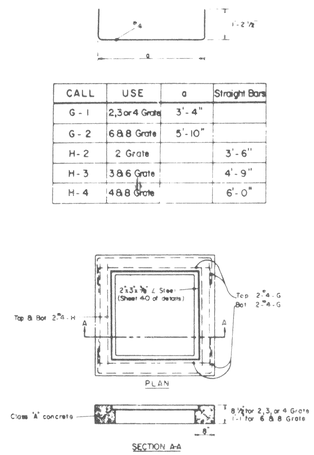

CALL	USE	a	Straight Bars
G-1	2,3 or 4 Grate	3'-4"	
G-2	6 & 8 Grate	5'-10"	
H-2	2 Grate		3'-6"
H-3	3 & 6 Grate		4'-9"
H-4	4 & 8 Grate		6'-0"

STEEL REQUIREMENTS FOR GRATE INLET SEAT

DETAIL 41

CAST IRON SIDE INTAKE UNIT FOR GRATED INLETS 249 LBS.

DETAIL 42

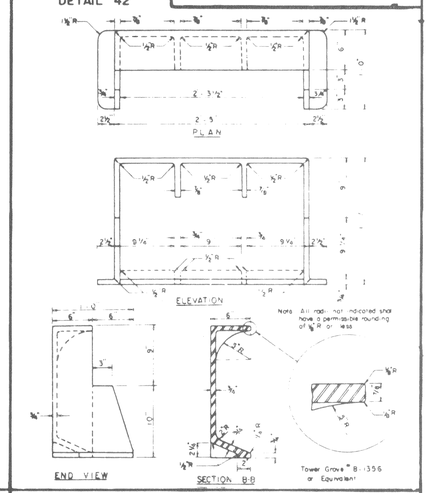

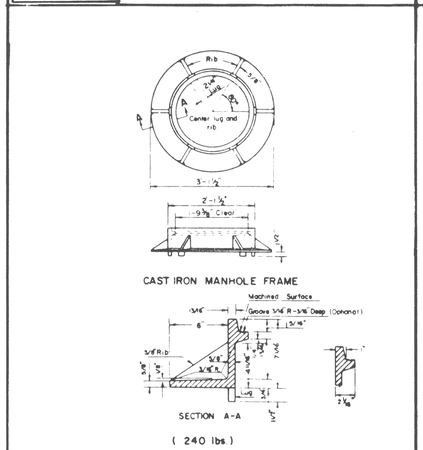

CAST IRON MANHOLE FRAME

DETAIL 43

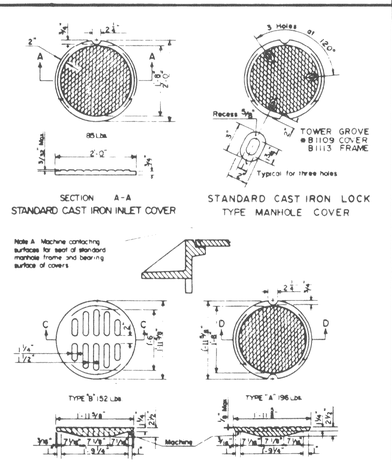

CAST IRON COVERS MANHOLES AND INLETS

DETAIL 44

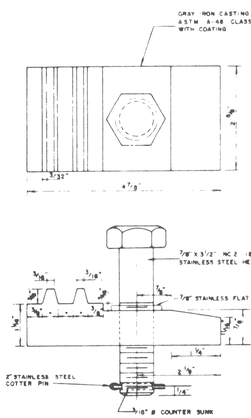

LOCK BLOCK FOR STANDARD CAST IRON LOCK TYPE MANHOLE COVER

DETAIL 45

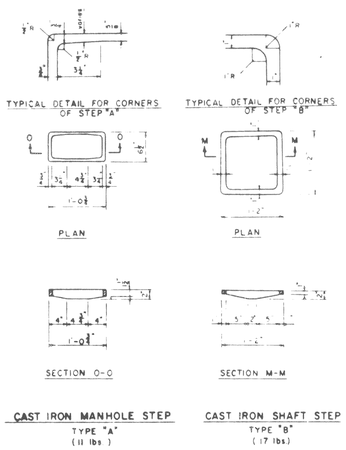

CAST IRON STEPS

DETAIL 46

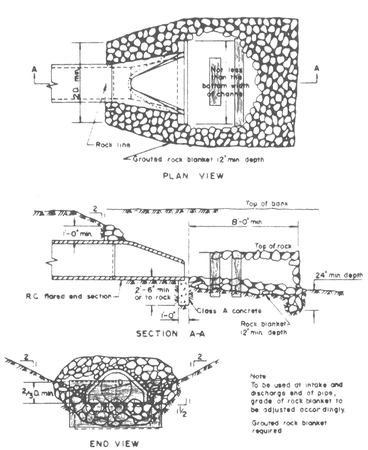

Note
To be used at intake and discharge end of pipe, grade of rock blanket to be adjusted accordingly.
Grouted rock blanket required.

FLARED END SECTION & ENERGY DISSIPATOR

DETAIL 47

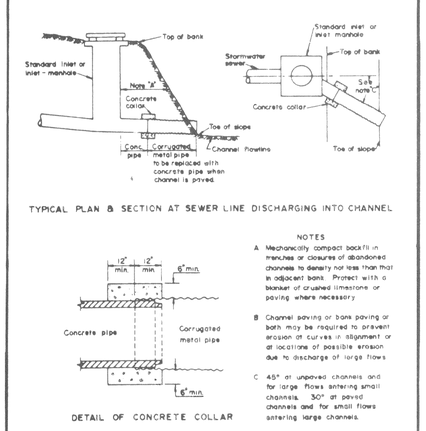

STORMWATER CHANNELS

DETAIL 48

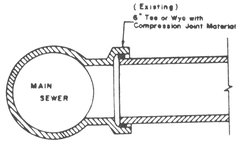

HOUSE SERVICE

1. 6" V.C.P. with compression joint.
2. 6" V.C.P. without compression joint. Use sewer tite and oakum.
3. If 4" house connection is approved, a 4" to 6" increaser is required.
4. If 6" P.V.C. is used a Fernco Adaptor or sewer tite and oakum may be used to make the joint.
5. A clean, dry bedding material is required around the completed connection before back filling. The bedding material shall be one of the following:
   A. M.S.D. No. 1 Bedding SEE DETAIL NO. 50
   B. 1 to 3 cement and sand
   C. PRE-MIX concrete

HOUSE CONNECTION TO EXISTING TEE OR WYE

DETAIL 49

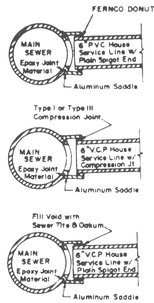

General Notes

1. 6" V.C.P. or 6" P.V.C. house connection into public V.C.P. or public P.V.C. main 8" to 24" diameter and no wye or tee available, a machine tap is required.
2. The District will cut the hole in the main, provide and epoxy the saddle to the main. All other material and labor are the responsibility of the contractor.
3. A clean, dry bedding material is required around the completed connection before back filling. The bedding material shall be one of the following:
   a. M.S.D. No. 1 Bedding. SEE DETAIL NO. 50.
   b. 1 to 3 cement to sand.
   c. PRE-MIX concrete
4. If 4" house connection is approved, a 4 to 6" increaser is required at machine tap.
5. In order that the inspector make an inspection, all excavation must be adequately braced.
6. All material required to make an approved connection must be on the connection site at the time of arrival of the tap truck. If the material is not available, the tap must be rescheduled.

Designation: MSD 1 — Bedding
For Pipes 27 inch in diameter and smaller:

Sieve	% by Weight Passing Maximum	Minimum
1 inch	100	100
¾ inch	100	90
½ inch	60	35
# 100	10	0

MACHINE TAP

DETAIL 50

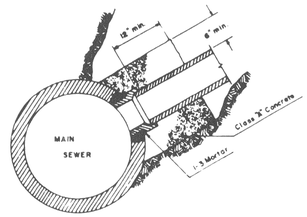

Note: The opening shall be cut by the contractor to a sufficient size to permit inserting a tee saddle or short length of pipe at the required elevation and angle to allow at least two (2) inches space around the pipe. This space will be solidly filled with 1:3 cement-sand mortar and the new pipe neatly trimmed and pointed up flush with the inside of the main sewer.

If there are reinforcing bars in the sewer wall, only those preventing insertion of the pipe may be cut. All others shall be bent into a Class "A" concrete collar at the junction of the connection pipe and the main sewer.

HOUSE CONNECTIONS ALLOWED BY TEE SADDLE

DETAIL 51

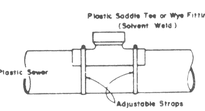

When a connection to a plastic pipe is allowed and the connection is larger than 6" in diameter, a solvent weld wye or tee fitting of a similar material must be used. (Example: 10" x 8")

This is accomplished by carefully cutting a hole with a saw in the main at the required location. After cutting and shaping the hole to the size of the fitting, the following steps should be taken:

1. Clean and dry both inside saddle wye surface and pipe surface to be solvent cemented.
2. Important: Apply a liberal, heavy coat of a ONE-STEP SOLVENT CEMENT to the inside surface of the saddle wye and to the exterior welding surface of the pipe.
3. Without delay, make the surfaces and strap down tightly. A bead of solvent should appear after saddle has been strapped down tightly.
4. Using a rag or paper towel, wipe bead and any excess solvent cement off pipe and saddle.
5. Allow 30 - 60 minutes for set-up time before backfilling. Cure time depends on size and fit of materials being installed and various mild damp conditions.
6. Discard old solvent if it becomes jelled or lumpy.
7. A clean, dry bedding material is required around the completed connection before backfilling. The bedding material shall be one of the following:
   A. M.S.D. #1 Bedding SEE DETAIL NO. 50.
   B. 1 to 3 Cement To Sand Mix
   C. "Pre-Mix" Concrete

8" (& LARGER) CONNECTION TO PLASTIC MAIN

DETAIL 52

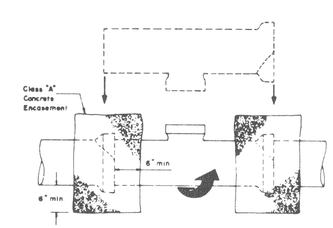

When a connection is allowed larger than 6" diameter a saddle may be used if the I.D. of the connection pipe is not greater than one-half (1/2) the I.D. of the main sewer. (Example: 24" x 10")

If the I.D. of the connection pipe is greater than one-half (1/2) the I.D. of the main sewer the wye or tee must be "rolled-in". (Example: 15" x 8")

This is accomplished by breaking away and removing one section of pipe. The top half of the bell on the pipe lying adjacent to the gap is carefully broken off. The top half of the bell on the main replacement section (with a Tee or "wye" fitting) is also broken off. The replacement pipe is then placed in the line gap with the stub pointed in the wrong direction. The broken bells on the replacement and the adjoining pipe make it possible for the replacement section to fit into the sewer line without disturbing the adjoining pipe sections. The replacement section is then rotated to the desired position and the broken bells are encased with a 6" Class "A" concrete encasement.

"ROLL-IN" (FOR EXISTING CLAY OR CONCRETE PIPE)

DETAIL 53

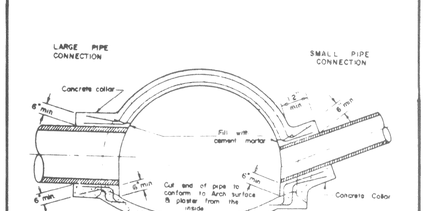

Notes: Opening into existing sewer to be cut carefully to avoid damage to adjacent masonry.

Hole to be cut to proper grade and elevation and to be of such size as to permit a two-inch space all around the outside of the pipe.

This space shall be carefully filled with one part cement and three parts sand mortar compacted into place after the pipe has been inserted and properly supported to line and grade.

Existing reinforcing bars are to be bent back into the concrete collar around the pipe to provide reinforcement equally on all sides.

CONNECTIONS TO LARGE SEWERS

DETAIL 54

9/10

CITY OF O'FALLON