NOTE: THIS DETAIL IS FROM PWSD#2

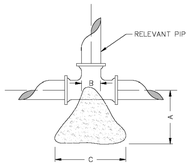

TEES AND TAPPING SLEEVE
NOT TO SCALE

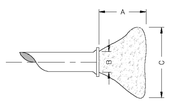

PLUGS
NOT TO SCALE

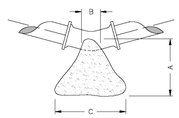

BENDS
NOT TO SCALE

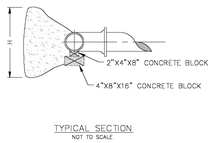

TYPICAL SECTION
NOT TO SCALE

THRUST BLOCK DIMENSIONS - INCHES

PIPE DIA.	ALL FTGS.		TEE PLUG TAPPING		90 DEGREE BEND		45 DEGREE BEND		22-1/2 BEND		11-1/4 BEND	
	A	B	C	H	C	H	C	H	C	H	C	H
4	14	4	24	12	26	15	18	12	12	12	12	12
6	16	6	36	18	36	24	30	18	24	12	12	12
8	20	8	36	30	42	36	36	24	24	18	18	12
10	20	10	48	36	66	36	36	36	28	24	18	18
12	24	12	68	36	82	42	52	36	40	24	28	18

NOTE

FOR FITTINGS LARGER THAN 12", SPECIAL RESTRAINT DESIGNS ARE REQUIRED.

HORIZONTAL THRUST BLOCKING
DETAIL "C"

NOTE: THIS DETAIL IS FROM PWSD#2

NOTES

6" PIPES BETWEEN VALVE AND FIRE HYDRANT SHALL BE D.I. "ANCHOR LOKS" OR DUCTILE IRON PIPE WITH "MEGALUG" RESTRAINER FOLLOWER GLANDS ON ALL M.J. JOINTS.

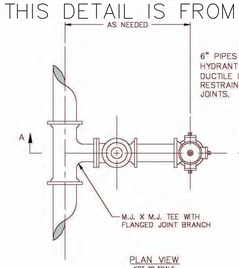

PLAN VIEW
NOT TO SCALE

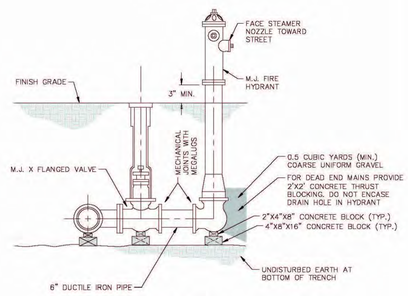

SECTION "A-A"
NOT TO SCALE

FIRE HYDRANT DETAIL
DETAIL "B"
PAGE 1 OF 3

NOTE: THIS DETAIL IS FROM PWSD#2

NOTES

6" PIPES BETWEEN TEE AND VALVE AND BETWEEN VALVE AND FIRE HYDRANT SHALL BE D.I. "ANCHOR LOKS" OR DUCTILE IRON PIPE WITH "MEGALUG" RESTRAINER FOLLOWER GLANDS ON ALL M.J. JOINTS.

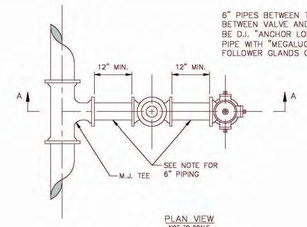

PLAN VIEW
NOT TO SCALE

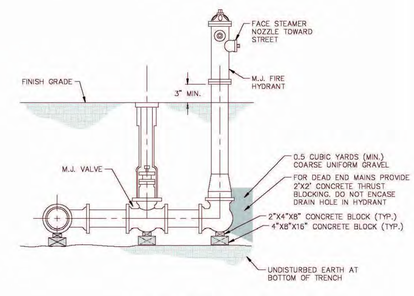

SECTION "A-A"
NOT TO SCALE

FIRE HYDRANT DETAIL
DETAIL "B"
PAGE 2 OF 3

NOTE: THIS DETAIL IS FROM PWSD#2

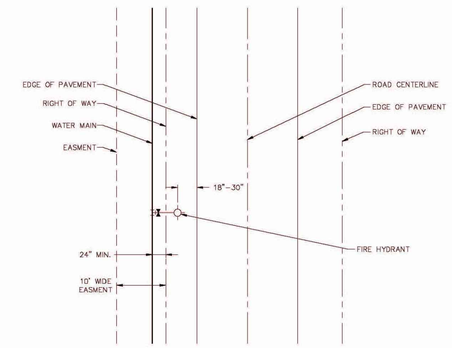

FIRE HYDRANT LOCATION
NOT TO SCALE

FIRE HYDRANT DETAIL
DETAIL "B"
PAGE 3 OF 3

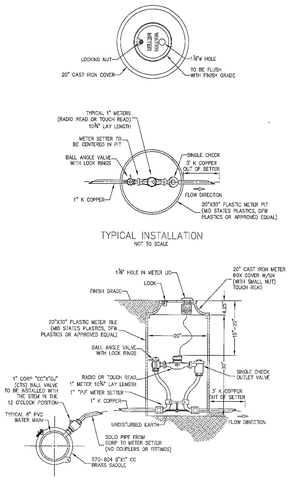

TYPICAL 1" RESIDENTIAL WATER SERVICE DETAIL "C"

PUBLIC WATER SUPPLY DISTRICT #2 OF SAINT CHARLES COUNTY

NOTE: THIS DETAIL IS FROM PWSD#2

Buffalo box is an acceptable product to use.
Tyler 562-S and 564-S are acceptable products.

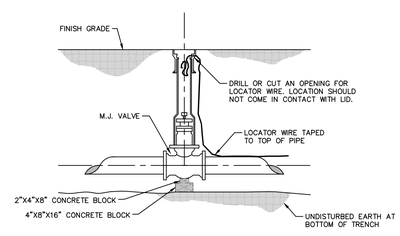

GATE VALVE DETAIL
NOT TO SCALE
DETAIL "D"

NOTE: THIS DETAIL IS FROM PWSD#2

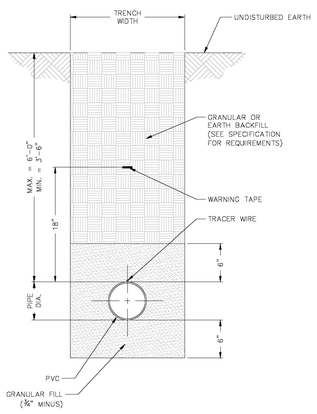

NOTES

1) SEE SPECIFICATIONS FOR ADDITIONAL DETAILS FOR BEDDING AND BACKFILL.

TYPICAL TRENCH SECTION FOR PVC PIPE
NOT TO SCALE
DETAIL "A"
PAGE 1 OF 2

NOTE: THIS DETAIL IS FROM PWSD#2

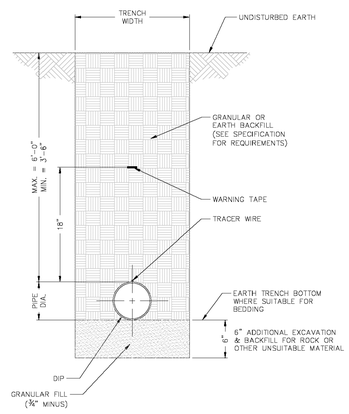

NOTES

1) POLYWRAP REQUIRED FOR DUCTILE IRON PIPE
2) SEE SPECIFICATIONS FOR ADDITIONAL DETAILS FOR BEDDING AND BACKFILL.

TYPICAL TRENCH SECTION FOR DUCTILE IRON PIPE
NOT TO SCALE
DETAIL "A"
PAGE 2 OF 2

INSTALLATION OF CONDUITS FOR PROPOSED 1" WATER SERVICE LINES WILL REQUIRE THE FOLLOWING:

- THE CONDUITS SHALL CONSIST OF 2" SCHEDULE 40 PVC CONDUIT WITH EITHER GLUED OR GASKET JOINTS.
- THE CONDUITS SHALL BE INSTALLED PER THE MANUFACTURER'S RECOMMENDATIONS.
- THE CONDUIT SHALL HAVE AT LEAST 42" OF COVER.
- ALIGNMENT OF CONDUIT MUST BE PERPENDICULAR TO THE CENTERLINE OF THE STREET ROADWAY.
- THE CONDUITS SHALL ONLY CONSIST OF STRAIGHT PIPE. NO BENDS OR DEFLECTIONS SHALL BE ALLOWED.
- THE CONDUIT SHALL EXTEND NO LESS THAN 2' FROM BOTH EDGES OF THE STREET.
- ONLY ONE SERVICE SHALL BE PLACED IN EACH CONDUIT.
- A SNUG FITTING PVC CAP SHALL BE PLACED ON EACH END OF THE CONDUIT TO PREVENT THE INTRUSION OF DIRT, ROCKS, DEBRIS, OR OTHER POTENTIAL IMPEDIMENTS PRIOR TO THE FUTURE WATER SERVICE LINE INSTALLATIONS. GLUING OF THE CONDUIT CAP ONTO THE CONDUIT IS NOT REQUIRED.
- A STEEL ROD OR REBAR WITH MINIMUM ½" DIAMETER AND 4' LENGTH SHALL BE PLACED VERTICALLY, BELOW GRADE, AND AGAINST THE OUTSIDE OF EACH CONDUIT CAP.

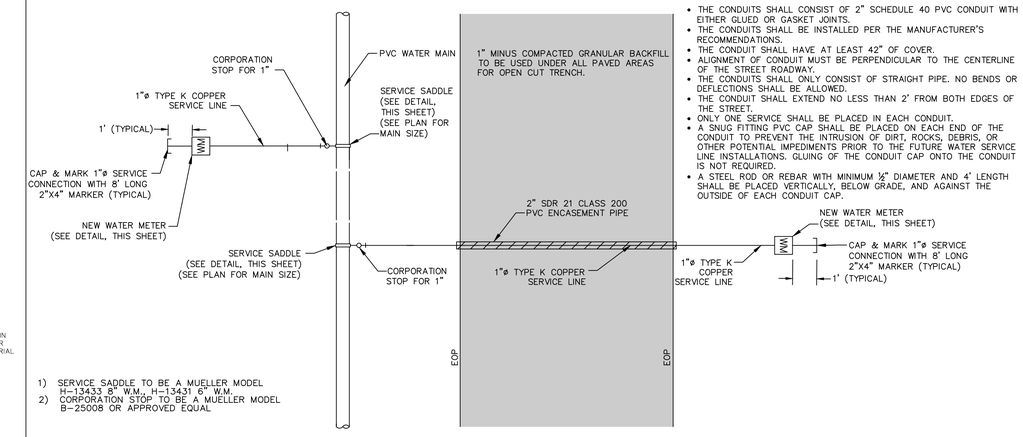

1) SERVICE SADDLE TO BE A MUELLER MODEL H-13433 8" W.M., H-13431 6" W.M.
2) CORPORATION STOP TO BE A MUELLER MODEL B-25008 OR APPROVED EQUAL

SERVICE CONNECTION DETAIL
NO SCALE

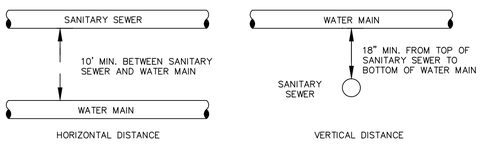

TYPICAL WATER AND SEWER SEPARATION
NOT TO SCALE

Ductile Iron Pipe installation shall follow the Ductile Iron Research Association (DIPRA) guide line.
The Installation of PVC Pipe shall follow the Uni-Bell PVC Pipe Association Handbook of PVC Design and Construction.

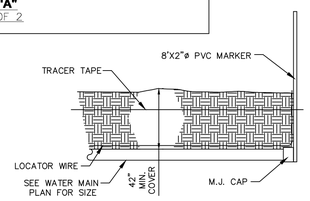

WATER MAIN CAP AND MARK DETAIL
NO SCALE

OWNER/DEVELOPER:
DD LAND DEVELOPMENT, LLC
10407 BAUR BLVD. SUITE B
ST. LOUIS, MO 63132

636-584-0540 (tel.)
636-584-0542 (fax)
mail@cochranengineering.com
5304 E. Independence Dr.
Union, Missouri 63084
COCHRAN
• Civil Engineering
• Land Surveying
• Architecture
• Site Development
• General Consulting
• Master Planning

Missouri State Certificate of Authority Numbers:
Survey : 000380
Engineering : 001655
Architecture: 2002014240

Three working days prior to the start of any excavation on this site, contractor shall contact the "Missouri One Call" for utility location information.

All OSHA rules & regulations established for the type of construction covered by these plans shall be strictly followed (ie. Trenching, Blasting, etc.)

STATE OF MISSOURI
ELLIOTT R. REED
NUMBER PE-2006002845
PROFESSIONAL ENGINEER

THE STREETS OF CALEDONIA
PHASE II RESIDENTIAL
O'FALLON, MISSOURI

DATE:	REVISION:	DRN. BY:	APPD. BY:

DRN. BY: TJG
APPD. BY: ERR
DATE: JAN. 13, 2021
SCALE: NO SCALE
PROJ. NO: 17-6821
DWG. NO: C14.07

DETAIL SHEET

Drawing name: F:\17-6821 - 260 Acre Tract along Hwy 40, O'Fallon, MO\AutoCad Drawings\6821 - Plan Sheets\Construction Drawings\PH2 Residential Plans\32_Detail Sheet Phase 2.dwg Tab: C14.07 Plotted on: Jan 13, 2021 - 3:50pm Plotted by: jmeyer