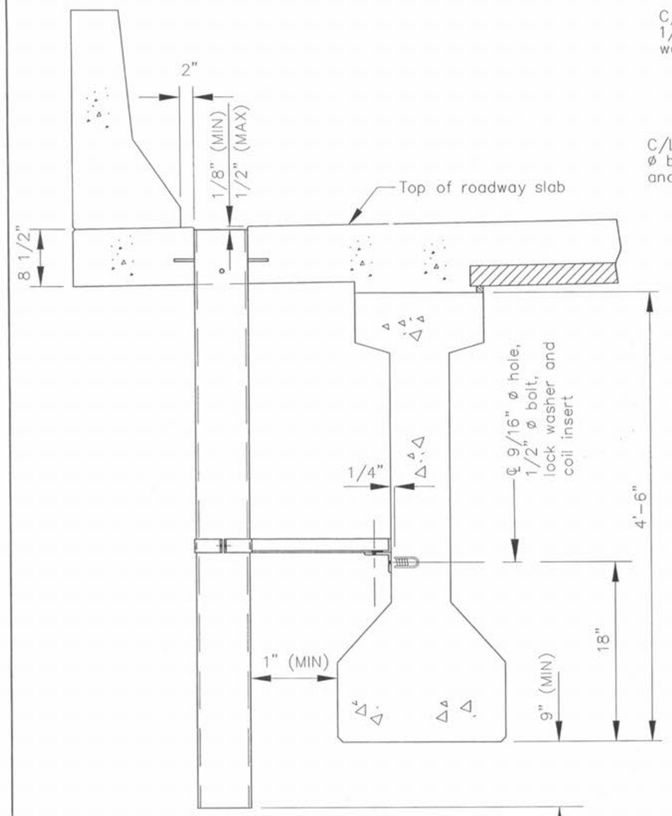

PART SECTION NEAR DRAIN

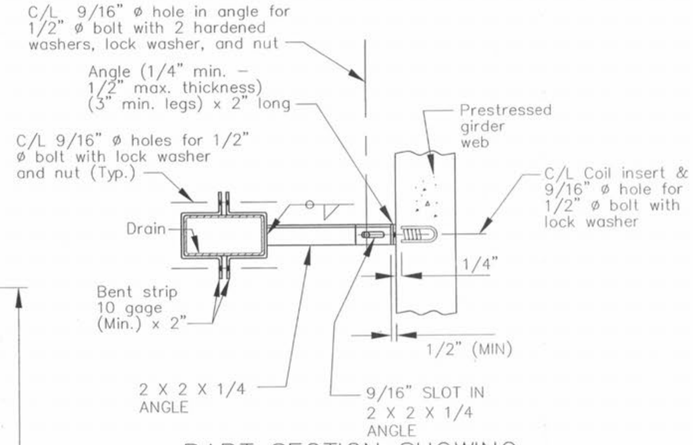

PART SECTION SHOWING BRACKET ASSEMBLY

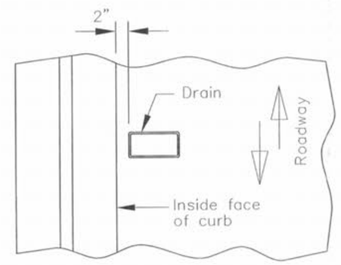

PART PLAN OF SLAB AT DRAIN

SLAB DRAIN DETAILS

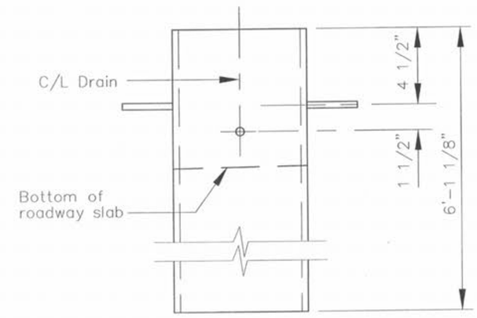

ELEVATION OF DRAIN

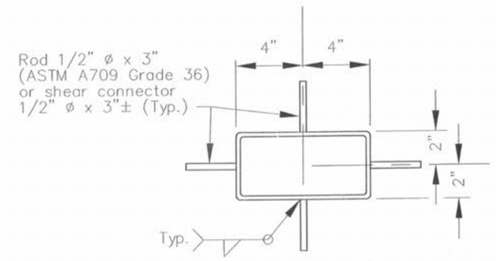

PLAN OF DRAIN

NOTE:

Slab drains may be fabricated of either 1/4" welded sheets of ASTM A709 Grade 36 steel or from 1/4" structural steel tubing ASTM A500 or A501.

Slab drain bracket assembly shall be ASTM A709 Grade 36 steel.

Outside dimensions of drains are 8" x 4".

Locate drains in slab by dimensions shown in Part Section Near Drain.

Shift reinforcing steel in field where necessary to clear drains.

The drains, coil inserts and bracket assembly shall be galvanized in accordance with ASTM A123.

All bolts, hardened washers, lock washers and nuts shall be galvanized in accordance with ASTM A153.

The coil insert required for the bracket assembly attachment shall be located on the Prestressed Girder shop drawings.

Shop drawings will not be required for the slab drains and the bracket assembly.

Coil inserts shall have a concrete pull-out strength (ultimate load) of at least 2,500 pounds in 5,000 psi concrete.

The bolt required to attach the slab drain bracket assembly to the prestresssed girder web shall be supplied by the prestressed I-Girder fabricator.

ENGINEER'S AUTHENTICATION: The responsibility for professional engineering liability on this project is hereby limited to the set of plans authenticated by the seal, signature and date hereto attached. Responsibility is disclaimed for all other engineering plans involved in this project and specifically excludes revisions after this date, unless reauthenticated.

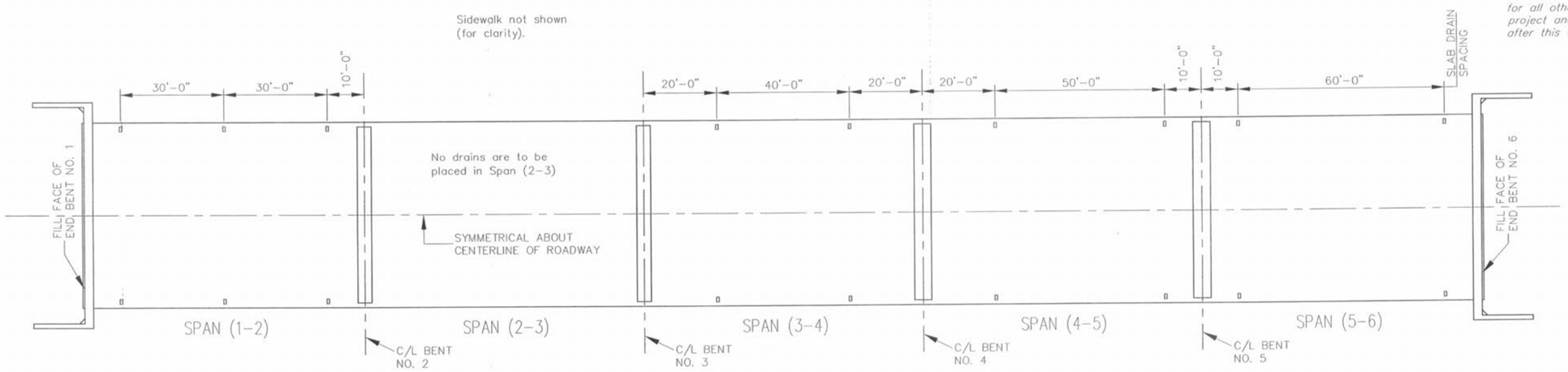

PLAN OF SLAB, SHOWING LOCATION OF SLAB DRAINS

NOTE: This drawing is not to scale. Follow dimensions.

CITY OF O'FALLON PROJECT #210-005

SHANNON J. HOWE NUMBER E-2000162117 REGISTERED PROFESSIONAL ENGINEER

10-28-2003

SLAB DRAIN DETAILS

SHAFER, KLINE & WARREN, INC.	*107 BUTLER ST.*	*P.O. BOX 366*	*MACON, MO. 63552*	*660-385-6441*	*CITY OF O'FALLON*	*T.R. HUGHES BLVD.*	*SHEET 24 OF 35*	*200846*