CURB RAMPS NOTES

1. DO NOT SCALE DRAWING. FOLLOW DIMENSIONS.
2. SIDEWALKS AND SIDEWALK CURB RAMPS SHALL BE CONSTRUCTED IN ACCORDANCE WITH THESE DETAILS AND THE CURRENT APPROVED "AMERICANS WITH DISABILITIES ACT ACCESSIBILITY GUIDELINES" (ADAAG).
3. MINIMUM SIDEWALK WIDTH ALONG 6" VERTICAL CURB SHALL BE 5 FEET.
4. MAXIMUM SIDEWALK CROSS SLOPE 0.02'/FT. PROVIDE A 5' LANDING AT THE TOP OF EACH RAMP.
5. IF INTEGRAL CONCRETE CURB IS CONSTRUCTED, STRIKE A DUMMY JOINT ACROSS BOTTOM OF RAMP AT CURB LINE.
6. TRANSITIONS FROM RAMPS TO WALKS, GUTTERS, OR STREETS SHALL BE FLUSH AND FREE OF ABRUPT CHANGES.

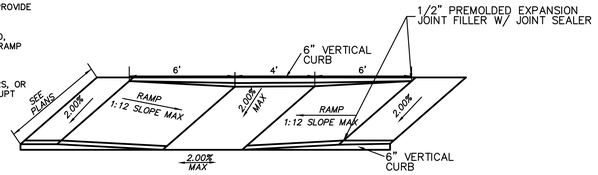

PARALLEL CURB RAMP - 6" VERTICAL CURB (TYPE 10)

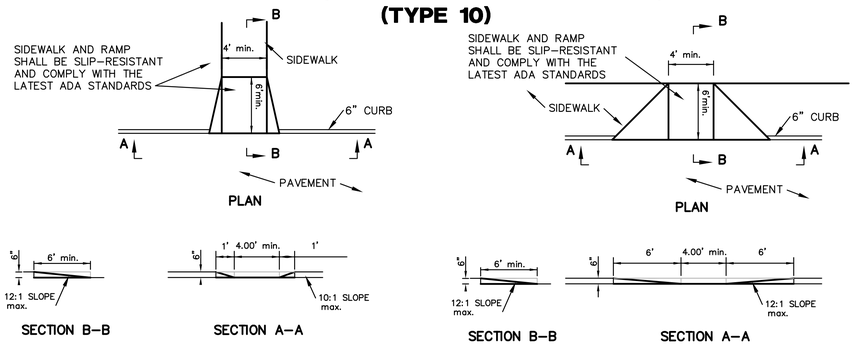

CURB RAMP DETAIL (TYPE 2)

CURB RAMP DETAIL (TYPE 6)

1 C8.6 CURB RAMP DETAILS

SCALE : NTS

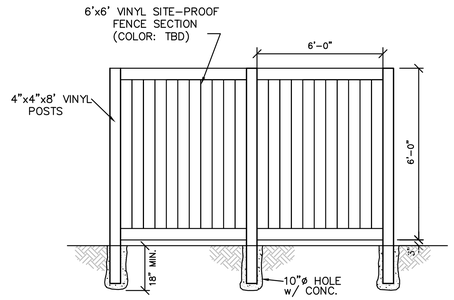

5 C8.6 SIGHT PROOF VINYL FENCE

SCALE : NTS

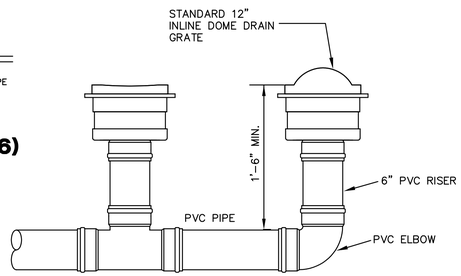

2 C8.6 YARD DRAIN

SCALE : NTS

PARTS LIST: **8' DOWNSTREAM DEFENDER**

ITEM	SIZE (IN)	MATERIAL	DESCRIPTION
1	96	CONCRETE	I.D. PRECAST MANHOLE
2	24	-	FRAME & COVER
3	24	PVC	INLET PIPE (BY OTHERS)
4	24	PVC	OUTLET PIPE (BY OTHERS)
5	24	-	PIPE COUPLING (BY OTHERS)
6	-	-	LEDGER ANGLE
7	-	-	SUPPORT FRAME
8	-	-	DIP PLATE
9	-	-	CENTER SHAFT & CONE
10	-	-	BENCHING SKIRT
11	-	-	MATERIALS & LABOR TO ACHIEVE FINAL GRADE (BY OTHERS)

NOTES:

- ENGINEER / CONTRACTOR TO CONFIRM PIPE MATERIALS
- ALL CONNECTIONS TO DOWNSTREAM DEFENDER TO BE A-LOK CONNECTIONS

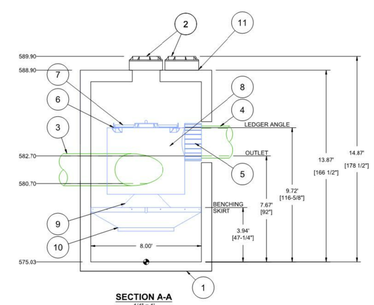

SECTION A-A
1/4" = 1'

CAPACITIES
1. PEAK TREATMENT FLOW: 15.0 CFS (425 L/S)
2. SEDIMENT STORAGE CAPACITY: 4.65 YD³ (3.56 m³)
3. OIL STORAGE CAPACITY: 540 GALLONS (2044 LITERS)

ADDITIONAL DESIGN INFORMATION
1. THE OUTLET PIPE STUB IS A ROTO-MOLDED PRODUCT WITH AN I.D. OF 24" THAT CANNOT BE MODIFIED. TO AVOID THE USE OF A REDUCER OR EXPANDER ON THE OUTLET AN 24" OUTLET PIPE SHOULD BE USED IF POSSIBLE.
2. ONLY SMALLER INLET PIPES MAY BE USED. THE INLET PIPE INVERT SHOULD BE PLACED ONE INLET PIPE DIAMETER BELOW THE OUTLET PIPE INVERT. THE I.D. OF THE INLET PIPE SHOULD BE PLACED TANGENT TO THE I.D. OF THE MANHOLE. HEADLOSS AT 15.0 CFS WITH AN 24" INLET: 13" (330 mm). HEADLOSS WILL INCREASE WITH SMALLER INLET PIPES.
3. SEDIMENT SHALL BE STORED IN A ZONE THAT IS ISOLATED FROM THE MAIN FLOW PATH AND PROTECTED FROM RE-ENTRAINMENT BY THE BENCHING SKIRT.

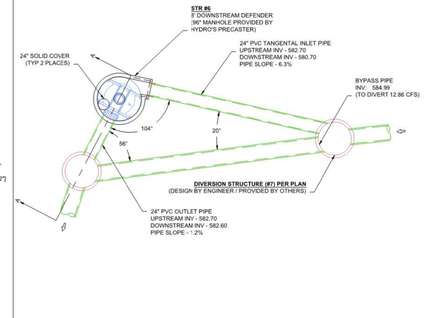

PLAN VIEW
1" = 10'

THE JEWEL
O'FALLON, MO
DATE: 05-23-19 DRAWN: BMG
PROJECT #: S134114 CHECKED: MEG

DESIGN STATUS
DATE: ISSUED FOR:

DESIGNED IN ACCORDANCE WITH THE MSD DESIGN MANUAL AND THE MSD STORMWATER MANUAL UNLESS OTHERWISE NOTED.
THE ENGINEER OF RECORD HAS PERFORMED A CONFLICT DETECTION SURVEY TO THE BEST OF HIS KNOWLEDGE AND BELIEF. THE ENGINEER OF RECORD HAS NOT PERFORMED FIELD VERIFICATION OF ALL POTENTIAL CONFLICTS.

Hydro International
4640 TRUEMAN BLVD
HILLIARD, OH 43026

AS NOTED

SHEET 2 OF 2

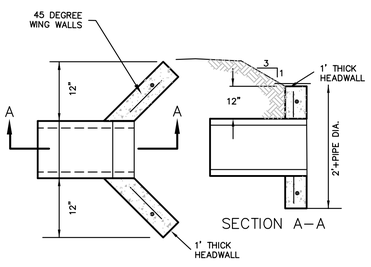

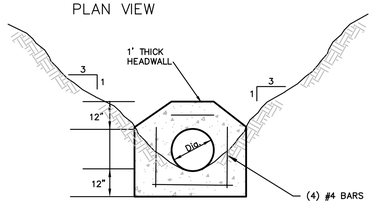

3 C8.6 HEADWALL DETAIL

SCALE : NTS

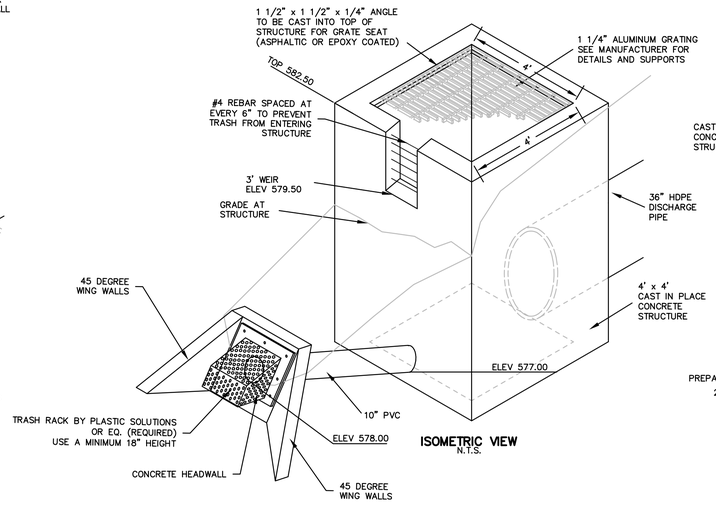

ISOMETRIC VIEW
N.T.S.

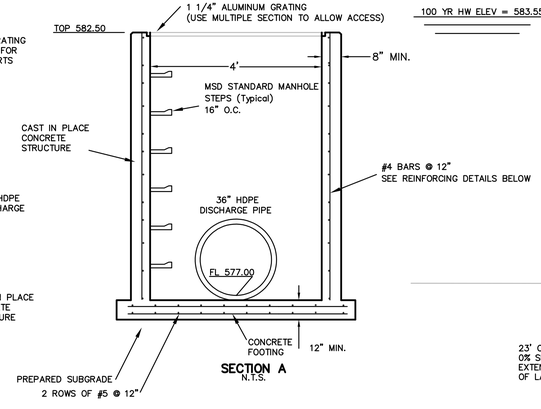

SECTION A
N.T.S.

100 YR HW ELEV = 583.55

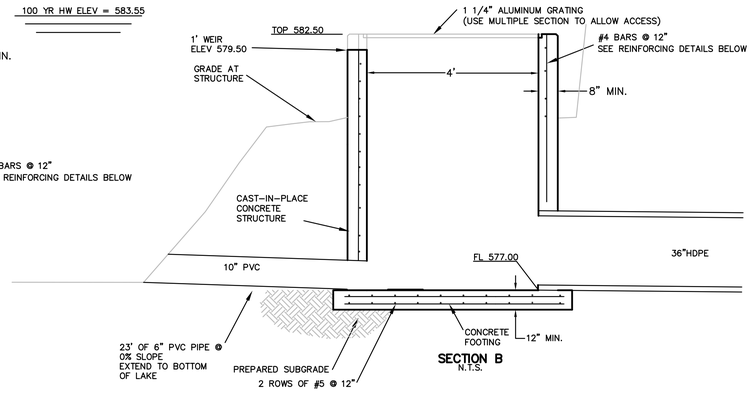

SECTION B
N.T.S.

4 C8.6 OUTFALL STRUCTURE DETAIL

SCALE : NTS

City of O'Fallon Standard Notes and Details – Nov. 2017

NO.	DESCRIPTION	DATE
1	REV 1	7-24-2019
2	REV 2	8-23-2019
3	REV 4	10-25-2019
4	REV 5	11-26-2019

PROJECT TITLE
THE JEWEL
15 CASTLE LANE
O'FALLON, MO 63366

GRIMES CONSULTING, INC.
Civil Engineering & Surveying Services
12300 OLD TESSON ROAD
SUITE 300D
ST. LOUIS, MO 63128
PH: (314) 849-6100
FAX: (314) 849-6010
www.grimesconsulting.com
GRIMES CONSULTING, INC.
PROFESSIONAL ENGINEER CORPORATION, E-1470-D
PROFESSIONAL LAND SURVEYING CORPORATION, LS-343-D

STATE OF MISSOURI
LEONARD J. MEERS
NUMBER E-28288
REGISTERED PROFESSIONAL ENGINEER
1/13/20
LEONARD J. MEERS
PROFESSIONAL ENGINEER
E-28288

Developer / Owner Information
VITA Residential
CONTACT: Steve Sisson
3333 Aspen Grove Dr
Franklin, TN 37067
Email: steve@vitapmg.com

SITE DETAILS

P+Z No. 19-001400
Approval Date: 6/6/2019
City No.

Page No.
C8.6