GBA GEORGE BUTLER ASSOCIATES, INC. Engineers / Architects / Landscape Architects / Planners Kansas City, Mo. / Lenexa, Ks. / O'Fallon, Mo. / Ames, Ia. / Oklahoma City, Ok.	DATE:	
	DESIGN BY: MCV	
	DRAWN BY: JMG	
	PROJECT NO. 6216/6326	
	SHEET NO.	TOTAL SHEETS
DETAILS	3	4
REVISIONS	BY	DATE

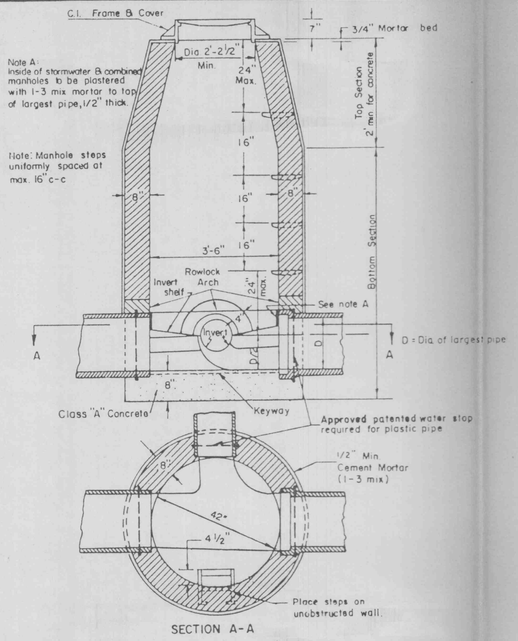

MANHOLE DETAIL
N.T.S.

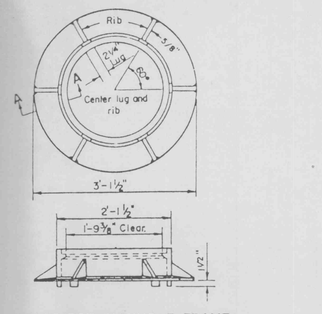

CAST IRON MANHOLE FRAME

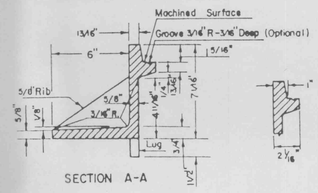

(240 lbs.)

CAST IRON MANHOLE FRAME
N.T.S.

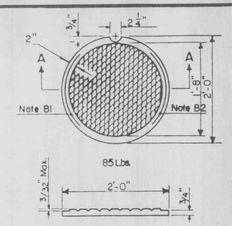

STANDARD CAST IRON INLET COVER

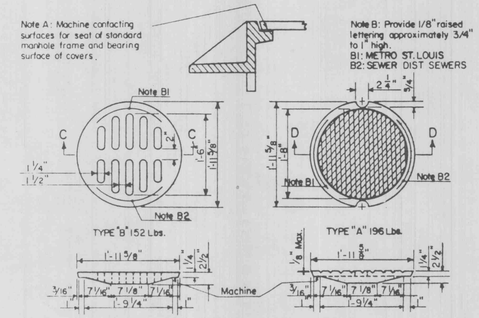

STANDARD CAST IRON MANHOLE COVERS

CAST IRON COVERS MANHOLES AND INLETS
N.T.S.

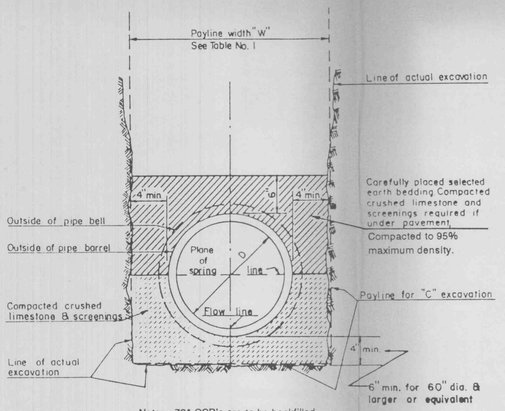

Note: 72" CSP's are to be backfilled with 1" clean limestone compacted. Except where noted.

PIPE BEDDING DETAIL
N.T.S.

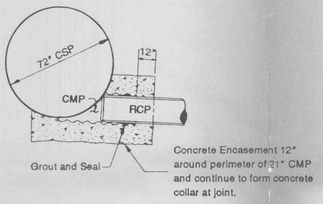

CONCRETE COLLAR DETAIL
N.T.S.

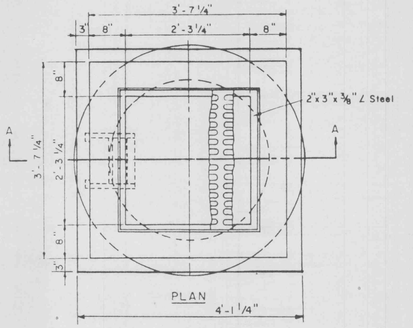

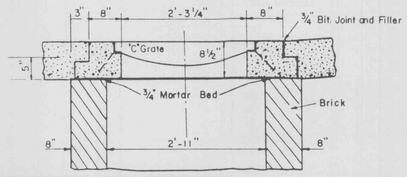

Note: Inlets on this sheet are to be used in locations where standard open throat inlets can not be used, in paved traffic way, and in limited easements.

2 - GRATE INLET
N.T.S.

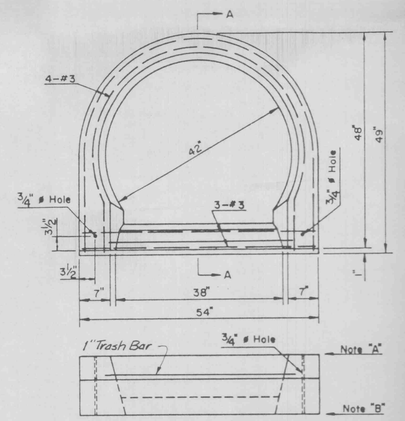

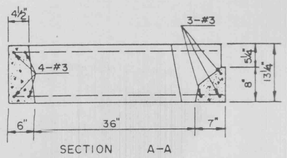

NOTES

A. Set standard inlet stone in 3/4" mortar bed and dowel with 5/8" ø 1'-0" long pins and grout.

B. Raise to final grade with courses of brick and 3/4" mortar bed.

C. This unit to be used with, 42" I.D., poured in place concrete or brick base.

D. 4000 P.S.I. concrete required.

PRE-CAST CONCRETE UNIT FOR SINGLE CURB INLET
N.T.S.

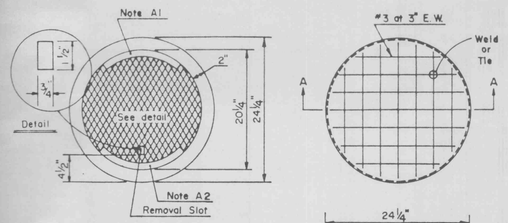

GRID DETAIL

Note:
Provide 1/8" raised lettering approximately 3/4" to 1" high.
A1: METRO ST. LOUIS
A2: SEWER DIST SEWERS

4000 P.S.I. concrete required.

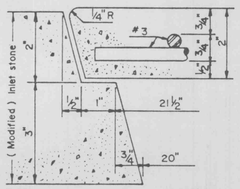

STANDARD INLET STONE MUST BE MODIFIED TO RECEIVE CONC. COVER

PRE-CAST CONCRETE INLET COVER
N.T.S.

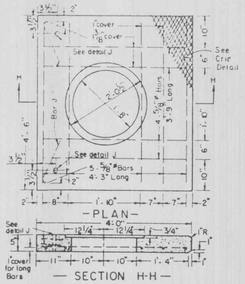

REINFORCED CONCRETE STONE

STANDARD STREET INLET AND MAIN UNIT OF MULTIPLE UNIT INLET

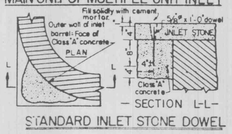

STANDARD INLET STONE DOWEL

INLET DETAILS
N.T.S.

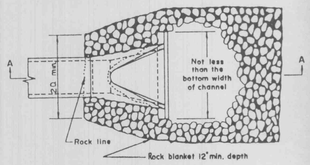

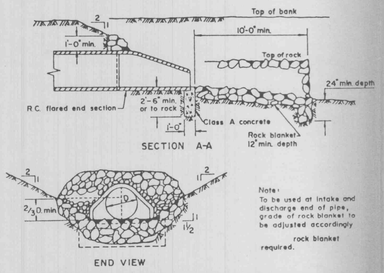

Note:
To be used at intake and discharge end of pipe, grade of rock blanket to be adjusted accordingly.
rock blanket required.

FLARED END SECTION DETAIL
N.T.S.

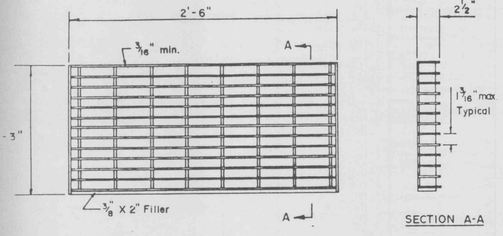

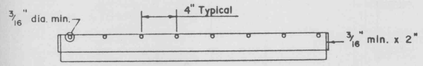

Finish	- Asphaltic 10 mil. coating
Material	- Mild carbon steel - ASTM A569
Capacity	- H-20 loading
Weight	- 65 lb. min.
Tolerances	- All dimensions ± 1/8"
Identification	- The manufacturer must place his name or mark on each unit for the purpose of identification

STEEL GRATE DETAIL
N.T.S.