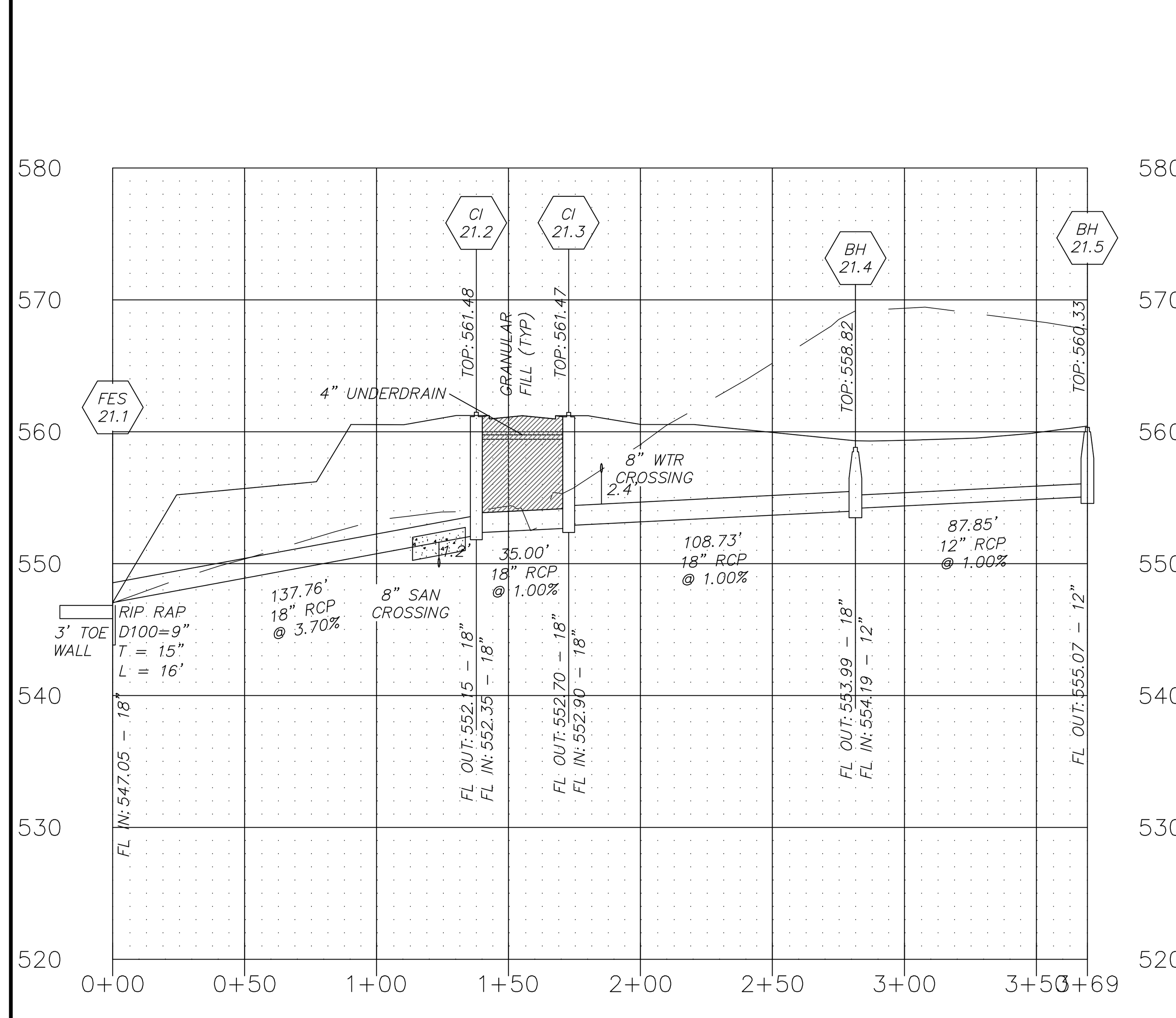

STORM 21

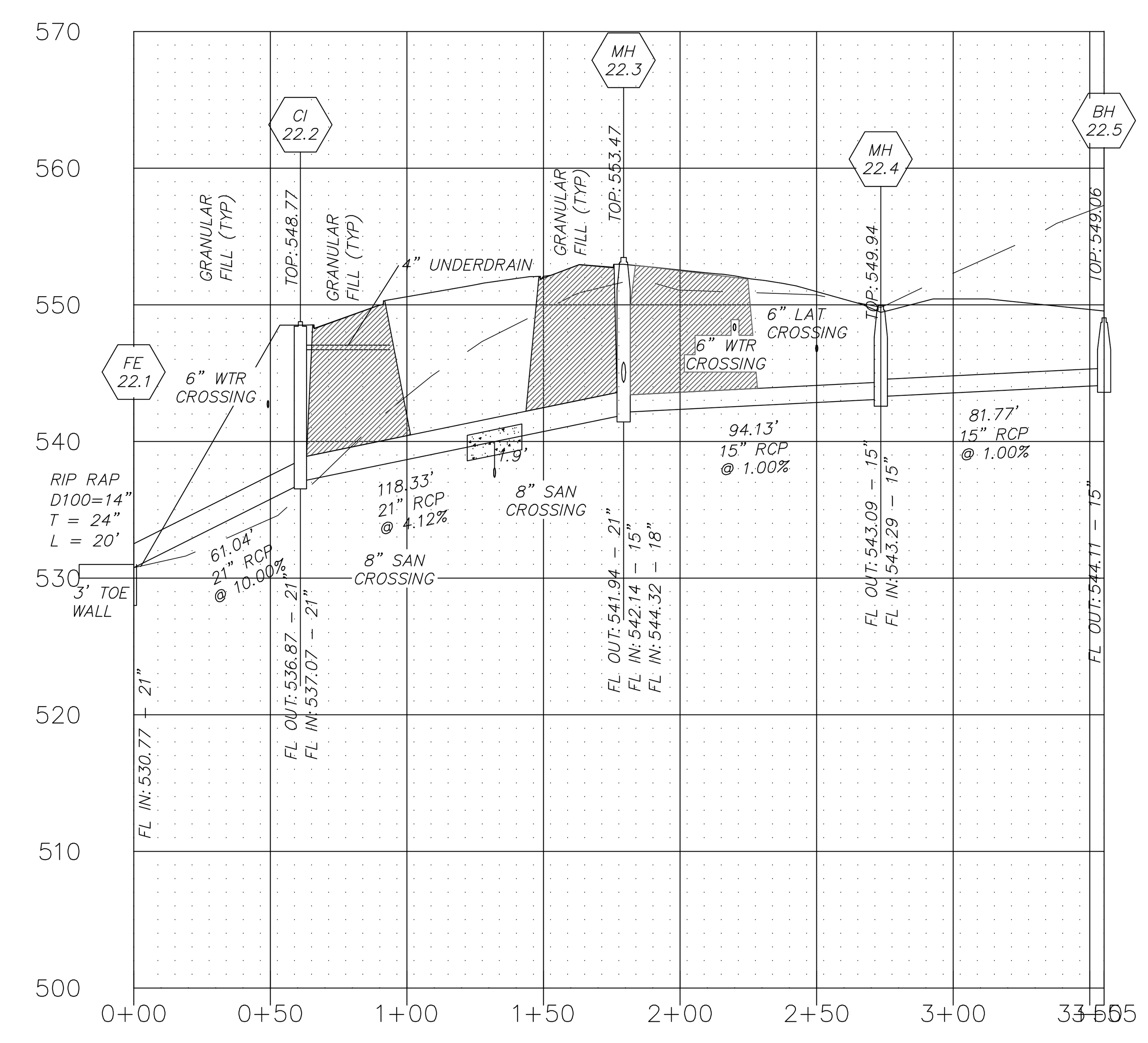

STORM 22

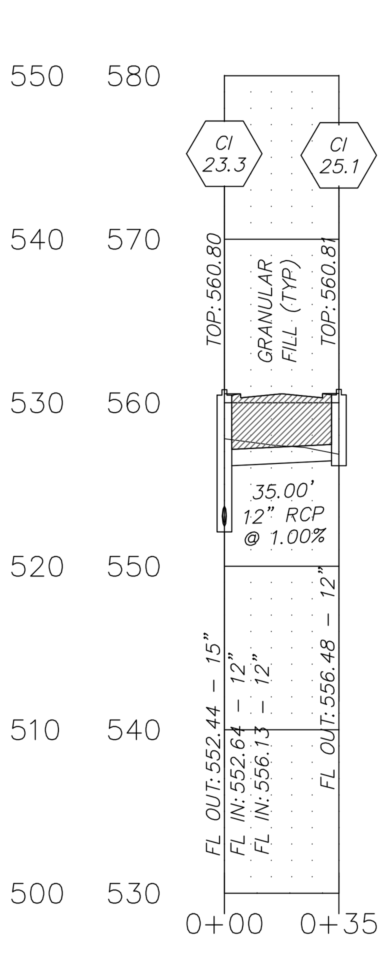

STORM 25

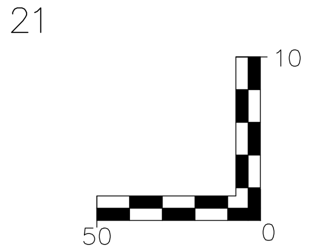

PROFILE SCALE:

HORZ: 1" = 50'

VERT: 1" = 10'

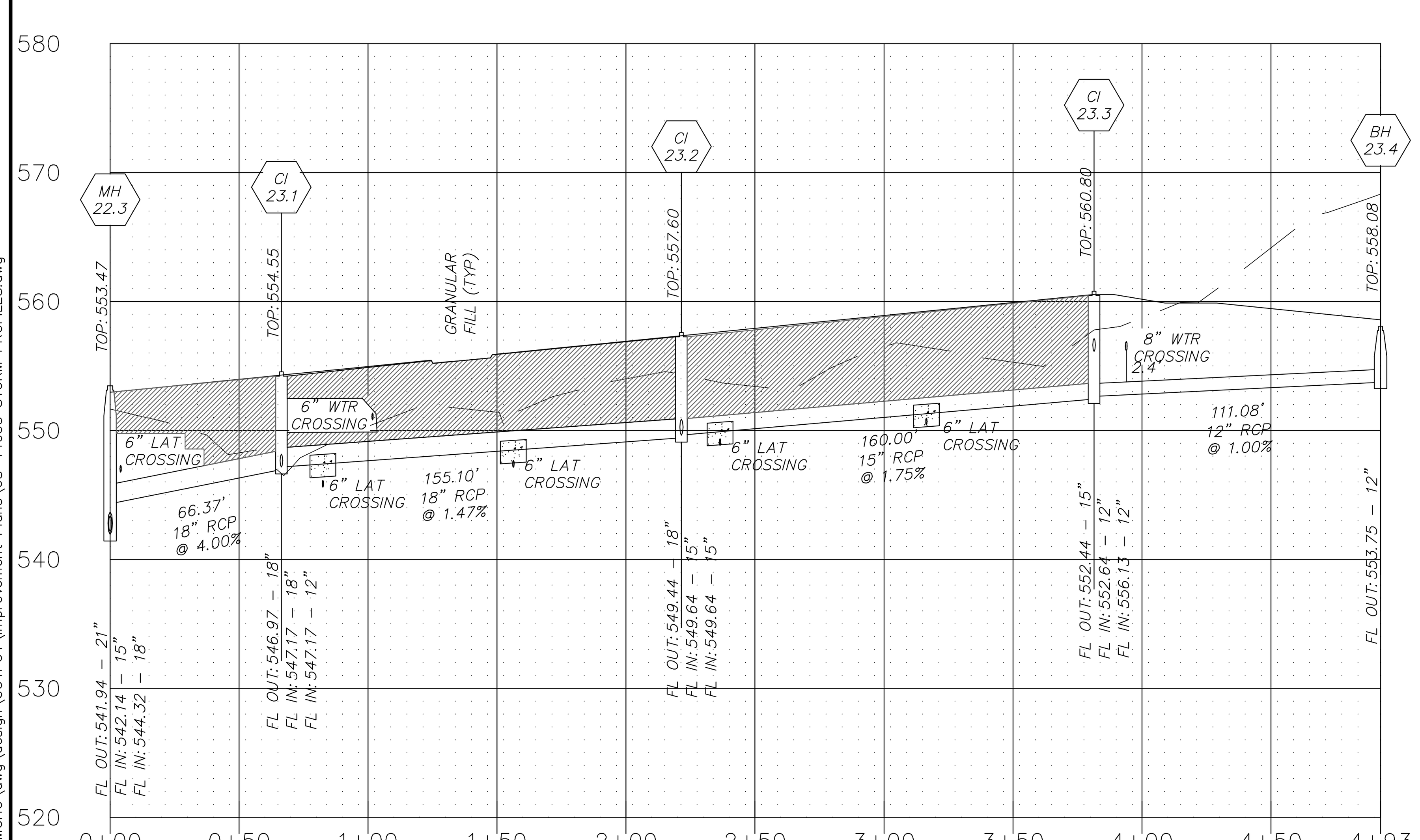

STORM 23

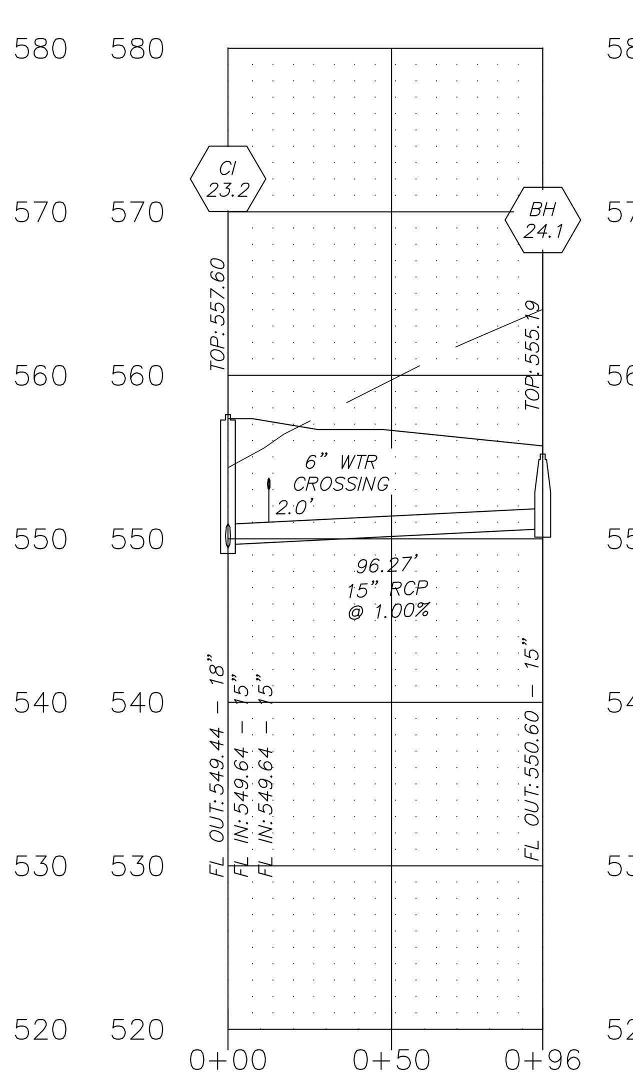

STORM 24

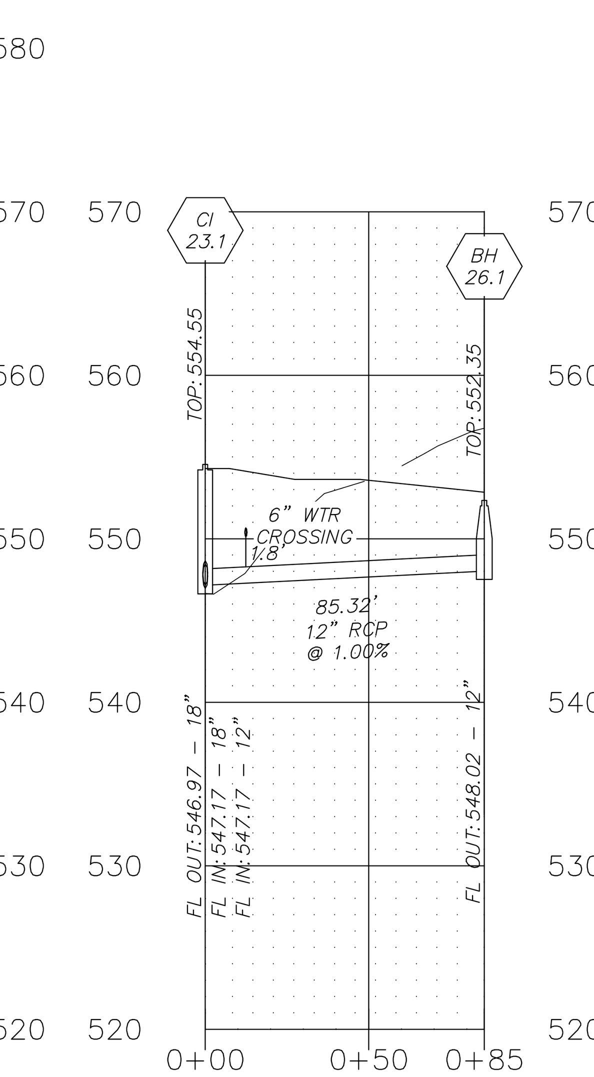

STORM 26

St Charles County Government
Hydraulic Review Output Data

\\PRS-SBS2011\Projects\14055.MCHO\hydraulics\14055 IMPROVEMENT.txt
12/23/2015 Calculations Under Full Flow

	Upp Str	Low Str	PL	S	Upp FL LN	Low FL LN	PS	Upp ST EL	Depth HY GR	Upp HY EL	Low HY EL	Hydr Grade	FR Head	VEL	VEL Head	Junc Loss	Turn Loss	Curve Loss	STR Grade	Inl Cap	DR Area	P.I.	Q	TQ	Pipe Cap	Remarks
1	CI25.1	CI23.3	35	12	556.48	556.13	1.00	560.81	3.66	557.15	557.13	0.00030	0.01	0.74	0.01	0.01	0.00	0.00	2	2.00	0.22	2.64	0.58	0.58	3.56	
2	BH26.1	CI23.1	85	12	548.02	547.17	1.00	552.30	3.74	548.56	548.17	0.00330	0.28	2.62	0.11	0.11	0.00	0.00	0	4.80	0.78	2.64	2.06	2.06	3.56	
3	BH24.1	CI23.2	96	15	550.60	549.64	1.00	555.19	4.04	551.15*	550.89	0.00150	0.14	2.05	0.07	0.07	0.00	0.00	0	4.80	0.95	2.64	2.51	2.51	6.46	
4	BH23.4	CI23.3	111	12	553.75	552.64	1.00	558.08	3.72	554.36*	553.64	0.00480	0.53	3.13	0.15	0.15	0.00	0.00	0	4.80	0.93	2.64	2.46	2.46	3.56	
5	CI23.3	CI23.2	160	15	552.44	549.64	1.75	560.80	7.79	553.01*	550.89	0.00310	0.50	2.95	0.14	0.11	0.00	0.00	2	2.00	0.22	2.40	0.58	3.62	8.55	
6	CI23.2	CI23.1	155	18	549.44	547.17	1.46	557.60	7.39	550.21*	548.67	0.00390	0.60	3.71	0.21	0.13	0.00	0.00	2	2.00	0.16	2.64	0.42	6.55	12.69	
7	CI23.1	MH22.3	66	18	546.97	544.32	3.99	554.55	6.90	547.65*	545.82	0.00740	0.49	5.11	0.41	0.27	0.00	0.00	2	2.00	0.25	2.64	0.66	9.03	20.98	
8	BH22.5	MH22.4	82	15	544.11	543.29	1.00	549.06	4.35	544.71	544.54	0.00140	0.11	1.96	0.06	0.06	0.00	0.00	2	4.80	0.91	2.64	2.40	2.40	6.46	
9	MH22.4	MH22.3	94	15	543.09	542.14	1.01	549.94	6.32	543.62*	543.39	0.00140	0.13	1.96	0.06	0.00	0.04	0.00	0	0.00	0.00	2.64	0.00	2.40	6.49	
10	MH22.3	CI22.2	118	21	541.94	537.07	4.12	553.47	10.81	542.66*	538.82	0.00520	0.62	4.75	0.35	0.25	0.00	0.00	0	0.00	0.00	2.64	0.00	11.43	32.16	
11	CI22.2	FE22.1	61	21	536.87	530.77	9.99	548.77	11.27	537.50*	532.77	0.00720	0.44	5.59	0.49	0.00	0.04	0.00	0	4.00	0.84	2.64	2.01	13.44	50.08	ToP = 532.77
12	BH21.5	CI21.4	88	12	555.07	554.19	1.00	560.33	4.31	556.02	555.19	0.00700	0.61	3.79	0.22	0.22	0.00	0.00	0	4.80	1.13	2.64	2.98	2.98	3.56	
13	BH21.4	CI21.3	109	18	553.99	552.90	1.00	558.82	3.87	554.95	554.40	0.00510	0.55	4.24	0.28	0.00	0.00	0.00	0	4.80	1.71	2.64	4.51	7.49	10.50	
14	CI21.3	CI21.2	35	18	552.70	552.35	1.00	561.47	7.38	554.09	553.85	0.00700	0.24	4.96	0.38	0.00	0.00	0.00	0	4.00	0.48	2.64	1.27	8.76	10.50	
15	CI21.2	FE21.1	138	18	552.15	547.50	3.38	561.48	8.56	552.92*	548.55	0.00900	1.24	5.63	0.49	0.00	0.00	0.00	0	4.00	0.45	2.64	1.19	9.95	19.31	ToP=548.55
16	AI20.6	BH20.5	144	30	550.27	547.40	2.00	556.27	6.00	550.27*	549.90	0.00000	0.00	0.14	0.00	0.00	0.00	0.00	0	8.25	0.26	2.64	0.69	0.69	58.01	
17	BH20.5	BH20.4	155	30	547.20	543.30	2.52	553.10	5.65	547.45*	545.80	0.00000	0.00	0.25	0.00	0.00	0.00	0.00	0	4.80	0.20	2.64	0.53	1.21	65.11	
18	BH20.4	BH20.3	156	30	543.10	539.20	2.50	549.24	5.89	543.35*	541.70	0.00000	0.00	0.50	0.00	0.00	0.00	0.00	0	4.80	0.46	2.64	1.21	2.43	64.85	
19	BH20.3	BH20.2	201	30	536.84	528.79	4.01	544.44	7.25	537.19*	531.29	0.00010	0.02	0.69	0.01	0.00	0.00	0.00	0	4.80	0.36	2.64	0.95	3.38	82.14	
20	BH20.2	FE20.1	118	30	528.59	525.75	2.40	537.51	8.47	529.04*	527.00	0.00010	0.01	0.92	0.01	0.00	0.00	0.00	0	4.80	0.43	2.64	1.14	4.51	63.54	ToP=527.00
21	CI19.2	FE19.1	95	12	539.35	526.00	14.00	544.76	5.17	539.59*	527.00	0.00190	0.18	1.99	0.06	0.06	0.00	0.00	0	4.00	0.59	2.64	1.56	1.56	13.33	ToP= 527.00
22	CI18.1	MH15.2	40	12	539.45	537.04	6.00	544.08	3.77	540.31	540.24	0.00110	0.04	1.48	0.03	0.03	0.00	0.00	0	4.00	0.44	2.64	1.16	1.16	8.73	
23	CI17.2	CI17.1	35	12	552.14	551.74	1.14	557.95	5.15	552.80	552.74	0.00080	0.03	1.31	0.03	0.03	0.00	0.00	2	2.00	0.39	2.64	1.03	1.03	3.80	
24	CI17.1	BH16.3	126	12	551.23	544.81	5.09	558.02	6.51	551.51*	545.81	0.00170	0.21	1.88	0.05	0.00	0.01	0.00	2	2.00	0.17	2.64	0.45	1.48	8.04	
25	C16.10	CI16.9	35	12	563.74	563.39	1.00	568.08	3.69	564.39	564.39	0.00010	0.00	0.43	0.00	0.00	0.00	0.00	2	2.00	0.13	2.64	0.34	0.34	3.56	
26	CI16.9	BH16.8	125	12	561.16	559.91	1.00	568.09	6.63	561.46*	560.91	0.00040	0.05	0.88	0.01	0.00	0.00	0.00	2	2.00	0.13	2.64	0.34	0.69	3.56	
27	BH16.8	BH16.7	152	12	559.71	557.66	1.35	565.03	4.74	560.29*	558.66	0.00560	0.85	3.40	0.18	0.00	0.01	0.00	2	4.80	0.61	3.25	1.98	2.67	4.14	
28	BH16.7	BH16.6	158	15	557.46	554.38	1.95	561.99	3.89	558.10*	555.63	0.00520	0.82	3.81	0.23	0.00	0.00	0.00	2	4.80	0.63	3.17	2.00	4.67	9.02	
29	BH16.6	CI16.5	126	18	554.18	552.92	1.00	558.96	3.97	554.99*	554.42	0.00340	0.43	3.48	0.19	0.00	0.00	0.00	0	4.80	0.50	2.96	1.48	6.15	10.50	
30	CI16.5	CI16.4	35	18	522.72	522.37	1.00	561.84	8.91	552.93	552.78	0.00440	0.15	3.96	0.24	0.00	0.00	0.00	2	2.00	0.32	2.64	0.84	7.00	10.50	
31	CI16.4	BH16.3	151	18	552.17	544.81	4.88	561.83	9.05	552.78*	546.31	0.00560	0.84	4.44	0.31	0.00	0.00	0.00	2	2.00	0.32	2.64	0.84	7.84	23.20	
32	BH16.3	BH16.2	104	21	544.61	541.87	2.63	549.90	4.47	545.43*	543.62	0.00560	0.58	4.93	0.38	0.23	0.00	0.00	0	4.80	0.96	2.64	2.53	11.85	25.70	
33	BH16.2	BH16.1	104	21	541.67	540.23	1.38	547.75	4.75	543.00	542.29	0.00680	0.71	5.41	0.45	0.00	0.00	0.00	0	4.80	0.44	2.64	1.16	13.02	18.61	
34	BH16.1	MH15.6	67	21	540.03	539.70	0.50	545.60	3.31	542.29	541.54	0.00810	0.54	5.94	0.55	0.00	0.21	0.00	0	4.80	0.46	2.64	1.27	14.28	11.20	
35	CI15.8	CI15.7	36	12	546.68	545.97	1.99	551.01	4.02	546.99	546.97	0.00040	0.01	0.88	0.01	0.01	0.00	0.00	2	2.00	0.26	2.64	0.69	0.69	5.03	
36	CI15.7	MH15.6	168	12	544.75	539.70	3.00	551.14	6.07	545.07*	541.54	0.00150	0.25	1.74	0.05	0.00	0.00	0.00	2	2.00	0.26	2.64	0.69	1.37	6.17	
37	MH15.6	BH15.5	12	24	539.50	539.44	0.51	545.27	3.73	541.54	541.48	0.00480	0.06	4.98	0.39	0.00	0.00	0.00	0	0.00	0.00	2.64	0.00	15.66	16.16	
38	BH15.5	CI15.4	128	30	539.24	538.60	0.50	543.99	2.51	541.48	541.10	0.00160	0.20	3.39	0.18	0.00	0.18	0.00	0	4.80	0.38	2.64	1.00	16.66	29.00	
39	CI15.4	CI15.3	35	30	538.40	538.22	0.51	550.99	10.15	540.84	540.77	0.00190	0.07	3.61	0.20	0.00	0.00	0.00	4	1.10	0.40	2.64	1.06	17.71	29.29	
40	CI15.3	MH15.2	197	30	538.02	537.04	0.50	551.10	10.33	540.77	540.24	0.00200	0.39	3.70	0.21	0.00	0.14	0.00	4	1.10	0.16	2.64	0.42	18.14	29.00	
41	MH15.2	FE15.1	19	30	536.84	536.75	0.48	543.68	3.44	540.24	540.18	0.00210	0.04	3.81	0.23	0.02	0.00	0.00	0	0.00	0.00	2.64	0.00	18.68	28.42	15yr HW 540.18
42	BH14.8	BH14.7	124	12	551.06	548.54	2.03	555.39	3.96	551.43*	549.54	0.00170	0.21	1.88	0.05	0.05	0.00	0.00	0	4.80	0.56	2.64	1.48	1.48	5.08	
43	BH14.7	CI14.6	118	12	548.34	547.15	1.01	552.96	3.95	549.01*	548.15	0.00660	0.78	3.69	0.21	0.00	0.03	0.00	0	4.80	0.54	2.64	1.43	2.90	3.58	
44	CI14.6	CI14.5	37	15	546.95	546.58	0.99	555.67	7.68	547.99	547.83	0.00300	0.11	2.90	0.13	0.00	0.05	0.00	2	2.00	0.25	2.64	0.66	3.56	6.43	
45	CI14.5	MH14.4	40	15	546.38	545.98	0.99	555.44	8.00	547.44	547.23	0.00360	0.15	3.14	0.15	0.00	0.06	0.00	2	2.00	0.11	2.64	0.29	3.85	6.43	
46	MH14.4	BH14.3	100	15	545.78	542.51	3.26	554.86	8.59	546.27*	543.76	0.00360	0.36	3.14	0.15	0.00	0.07	0.00	0	0.00	0.00	2.64	0.00	3.85	11.66	
47	BH14.3	BH14.2	162	15	542.31	537.45	3.00	548.19	5.29	542.90*	540.39	0.00610	0.99	4.11	0.26	0.00	0.00	0.00	0	4.80	0.45	2.64	1.19	5.04	11.19	
48	BH14.2	FE14.1	50	18	537.25	536.75	1.00	541.56	1.17	540.39	540.18	0.00420	0.21	3.84	0.23	0.00	0.00	0.00	0	4.80	0.66	2.64	1.74	6.78	10.50	15 yr HW - 540.18
49	BH13.4	CI13.3	118	12	553.64	552.46	1.00	557.81	3.76	554.05*	553.46	0.00120	0.14	1.54	0.04	0.04	0.00	0.00	0	4.80	0.46	2.64	1.21	1.21	3.56	
50	CI13.3	CI13.2	35	12	552.26	551.91	1.00	560.31	7.33	552.98	552.91	0.00210	0.07	2.09	0.07	0.00	0.00	0.00	2	2.00	0.16	2.64	0.42	1.64	3.56	
51	CI13.2	MH13.1	90	12	551.71	550.81	1.00	560.30	8.05	552.25*	551.81	0.00330	0.30	2.62	0.11	0.00	0.03	0.00	2	2.00	0.16	2.64	0.42	2.06	3.56	
52	MH13.1	BH12.3	119	12	550.61	543.88	5.66	561.61	10.66	550.95*	544.88	0.00330	0.39	2.62	0.11	0.00	0.05	0.00	0	0.00	0.00	2.64	0.00	2.06	8.48	
53	CI12.5	CI12.4	35	12	547.41	547.06	1.00	552.83	4.77	548.06	548.06	0.00010	0.00	0.53	0.00	0.00	0.00	0.00	4	1.10	0.16	2.64	0.42	0.42	3.56	
54	CI12.4	BH12.3	128	12	546.86	543.88	2.34	552.82	5.68	547.14*	544.88	0.00060	0.08	1.15	0.02	0.00	0.00	0.00	4	1.10	0.18	2.64	0.48	0.90	5.45	
55	BH12.3	AI12.2	40	15	543.68	541.16	6.30	550.57	6.49	544.08*	542.41	0.00340	0.14	3.06	0.15	0.13	0.00	0.00	0	4.80	0.30	2.64	0.79	3.75	16.21	
56	AI12.2	FE12.1	72	15	540.94	536.75	5.84	549.32	7.93	541.39*	540.18	0.00420	0.30	3.42	0.18	0.00	0.07	0.00	0	8.25	0.17	2.64	0.45	4.20	15.61	15 Yr HW - 540.18
57	CI11.1	CI10.4	36	12	562.21	561.85	1.01	566.54	3.69	562.85	562.85	0.00000	0.00	0.23	0.00	0.00	0.00	0.00	2	2.00	0.07	2.64	0.18	0.18	3.58	
58	BH10.7	BH10.6	120	12	562.79	560.16	2.19	567.12	3.82	563.30*	561.16	0.00580	0.70	3.46	0.19	0.19	0.00	0.00	0	4.80	1.03	2.64	2.72	2.72	5.27	
59	BH10.6	MH10.5	92	15	559.96	559.04	1.00	564.49	3.71	560.78	560.29	0.00430	0.40	3.46	0.19	0.00	0.09	0.00	0	4.80	0.58	2.64	1.53	4.25	6.46	
60	MH10.5	CI10.4	92	15	558.84	557.92	1.00	567.00	7.34	559.66	559.17	0.00430	0.40	3.46	0.19	0.00	0.09	0.00	0	0.00	0.00	2.64	0.00	4.25	6.46	
61	CI10.4	CI10.3	50	15	557.72	557.22	1.00	566.38	7.53	558.85	558.47	0.00510	0.25	3.76	0.22	0.13	0.00	0.00	2	2.00	0.07	2.64	0.18	4.62	6.46	
62	CI10.3	CI10.2	35	15	557.02	556.67	1.00	566.27	8.02	558.25	557.92	0.00660	0.23	4.28	0.28	0.00	0.10	0.00	4	1.10	0.24	2.64	0.63	5.25	6.46	
63	CI10.2	MH10.1	124	15	556.47	552.12	3.50	566.27	9.19	557.08*	553.37	0.00830	1.03	4.80	0.36	0.00	0.08	0.00	4	1.10	0.24	2.64	0.63	5.89	12.09	
64	MH10.1	CI4.3	335	15	551.92	542.71	2.75	559.12	6.54	552.58*	543.96	0.00830	2.78	4.80	0.36	0.00	0.17	0.00	0	0.00	0.00	2.64	0.00	5.89	10.71	
65	CI9.5	CI9.4	48	12	571.00	568.60	5.00	575.33	4.05	571.28*	569.60	0.00160	0.08	1.81	0.05	0.05	0.00	0.00	4.5	1.03	0.37	3.85	1.42	1.42	7.97	BYPASS 0.39 TO CI8.3
66	CI9.4	AI9.3	55	12	566.88	559.93	12.66	575.33	8.11	567.22*	560.93	0.00820	0.45	4.11	0.26	0.00	0.02	0.00	4.5	1.03	0.47	3.85	1.81	3.23	12.68	BYPASS 0.78 TO CI9.1
67	AI9.3	AI9.2	153	15	559.73	557.13	1.70	564.46	4.09	560.37*	558.38	0.00460	0.70	3.57	0.20	0.00	0.12	0.00	0	5.50	0.36	3.19	1.15	4.38	8.42	
68	AI9.2	CI9.1	40	18	556.93	556.53	1.01	561.88	3.58	558.30	558.03	0.00340	0.13	3.46	0.19	0.00	0.14	0.00	0	8.25	0.66	2.64	1.74	6.12	10.56	
69	CI9.1	CI8.3	48	18	556.33	555.85	1.00	566.60	9.05	557.55	557.35	0.00380	0.18	3.66	0.21	0.00	0.02	0.00	4.5	1.03	0.13	2.64	0.34	6.46	10.50	BYPASS 0.09 TO CI5.5
70	BH8.7	BH8.6	156	15	560.38	557.25	2.01	564.96	4.09	560.87*	558.50	0.00220	0.34	2.46	0.09	0.09	0.00	0.00	0	4.80	0.88	3.43	3.02	3.02	9.16	
71	BH8.6	BH8.5	104	18	557.05	555.47	1.52	561.84	3.92	557.92	557.41	0.00490	0.51	4.14	0.27	0.00	0.00	0.00	0	4.80	1.23	3.50	4.30	7.32	12.95	
72	BH8.5	DAI8.4	60	18	555.27	554.37	1.50	561.23	3.82	557.41	556.51	0.01240	0.74	6.63	0.68	0.00	0.16	0.00	0	4.80	1.22	3.60	4.39	11.71	12.87	
73	DAI8.4	CI8.3	107	27	554.17	553.10	1.00	559.37	2.86	556.51	555.82	0.00640	0.69	6.24	0.60	0.00	0.00	0.00	0	16.50	3.50	3.75	13.13	24.82	30.97	
74	CI8.3	CI8.2	101	30	552.90	551.89	1.00	566.61	10.79	555.82	554.71	0.00610	0.61	6.54	0.66	0.50	0.00	0.00	4.5	1.03	0.30	2.64	0.79	32.09	41.02	BYPASS 0.15 TO CI8.2
75	CI8.2	CI8.1	35	30	551.69	551.34	1.00	563.28	8.57	554.71	554.17	0.00650	0.23	6.74	0.71	0.00	0.31	0.00	0	4.00	0.38	2.64	1.00	33.09	41.02	
76	CI8.1	AI6.2	112	30	551.14	550.02	1.00	563.29	9.12	554.17	553.08	0.00680	0.76	6.90	0.74	0.00	0.33	0.00	0	4.00	0.30	2.64	0.79	33.88	41.02	
77	CI7.2	CI7.1	35	12	555.00	554.65	1.00	559.33	3.66	555.67	555.65	0.00030	0.01	0.74	0.01	0.01	0.00	0.00	2	2.00	0.22	2.64	0.58	0.58	3.56	
78	CI7.1	CI6.1	53	12	554.45	553.92	1.01	559.34	4.37	554.97	554.92	0.00100	0.05	1.41	0.03	0.00	0.00	0.00	2	2.00	0.20	2.64	0.53	1.11	3.58	
79	CI6.6	CI6.5	35	12	563.43	563.08	1.00	567.97	3.89	564.08	564.08	0.00010	0.00	0.47	0.00	0.00	0.00	0.00	2	2.00	0.14	2.64	0.37	0.37	3.56	
80	CI6.5	BH6.4	128	12	562.88	556.51	5.00	567.86	4.76	563.10*	557.51	0.00040	0.05	0.94	0.01	0.00	0.00	0.00	2	2.00	0.14	2.64	0.37	0.74	7.97	
81	BH6.4	BH6.3	111	12	556.31	554.41	1.71	560.84	4.17	556.67*	555.41	0.00140	0.16	1.68	0.04	0.00	0.01	0.00	0	4.80	0.22	2.64	0.58	1.32	4.66	
82	BH6.3	AI6.2	124	12	554.21	551.73	2.00	558.75	4.04	554.71*	553.08	0.00520	0.64	3.26	0.17	0.00	0.00	0.00	0	4.80	0.47	2.64	1.24	2.56	5.04	
83	AI6.2	CI6.1	110	30	549.82	548.72	1.00	555.85	2.77	553.08	551.53	0.00870	0.96	7.77	0.94	0.59	0.00	0.00	0	5.50	0.65	2.64	1.72	38.16	41.02	
84	CI6.1	CI5.1	35	30	548.52	548.17	1.00	560.02	8.49	551.53	550.67	0.00930	0.33	8.07	1.01	0.53	0.00	0.00	2	2.00	0.13	2.64	0.34	39.61	41.02	
85	CI5.7	CI5.6	37	12	556.16	555.79	1.00	560.62	3.60	557.02	556.79	0.00330	0.12	2.62	0.11	0.11	0.00	0.00	3	1.75	0.78	3.13	2.06	2.06	3.56	
86	CI5.6	CI5.5	47	12	553.59	553.11	1.01	560.92	6.47	554.45	554.11	0.00620	0.29	3.57	0.20	0.00	0.05	0.00	3	1.75	0.28	2.64	0.74	2.80	3.58	
87	CI5.5	CI5.4	35	15	552.86	552.51	1.00	560.08	6.13	553.95	553.76	0.00280	0.10	2.80	0.12	0.00	0.09	0.00	2	2.00	0.24	2.64	0.63	3.43	6.46	
88	CI5.4	MH5.3	103	15	552.31	550.82	1.44	560.09	7.17	552.92*	552.07	0.00330	0.34	3.03	0.14	0.00	0.08	0.00	2	2.00	0.11	2.64	0.29	3.72	7.75	
89	MH5.3	BH5.2	92	15	550.62	549.40	1.32	556.40	5.15	551.24*	550.65	0.00330	0.30	3.03	0.14	0.00	0.10	0.00	0	0.00	0.00	2.64	0.00	3.72	7.42	
90	BH5.2	CI5.1	51	15	549.20	548.69	0.99	553.98	3.71	550.27	549.94	0.00500	0.26	3.74	0.22	0.00	0.07	0.00	0	4.80	0.33	2.64	0.87	4.59	6.43	
91	CI5.1	BH4.5	140	36	547.97	542.12	4.19	560.02	10.88	549.14*	545.23	0.00450	0.63	6.30	0.62	0.26	0.00	0.00	2	2.00	0.11	2.64	0.29	44.50	136.53	
92	B4.12	B4.11	176	12	557.13	551.94	2.95	561.34	3.87	557.47*	552.94	0.00200	0.35	2.02	0.06	0.06	0.00	0.00	0	4.80	0.59	2.71	1.59	1.59	6.12	
93	B4.11	B4.10	144	12	551.74	547.62	2.85	556.27	4.04	552.22*	548.62	0.00670	0.97	3.71	0.21	0.00	0.01	0.00	0	4.80	0.50	2.64	1.32	2.91	6.01	
94	B4.10	AI4.9	88	15	547.42	546.26	1.31	552.15	3.67	548.48	548.05	0.00450	0.40	3.51	0.19	0.00	0.03	0.00	0	4.80	0.53	2.64	1.40	4.31	7.39	
95	AI4.9	AI4.8	97	15	546.06	545.09	1.00	551.01	2.96	548.05	547.38	0.00600	0.58	4.07	0.26	0.00	0.09	0.00	0	11.00	0.26	2.64	0.69	5.00	6.46	
96	AI4.8	CI4.7	62	15	544.89	544.22	1.08	550.10	2.72	547.38	546.69	0.00920	0.57	5.06	0.40	0.00	0.12	0.00	0	8.25	0.46	2.64	1.21	6.21	6.71	
97	CI4.7	CI4.6	35	18	544.02	543.67	1.00	554.50	7.81	546.69	546.31	0.00550	0.19	4.43	0.30	0.00	0.19	0.00	0	4.00	0.61	2.64	1.61	7.82	10.50	
98	CI4.6	BH4.5	135	18	543.47	542.12	1.00	554.51	8.20	546.31	545.23	0.00800	1.08	5.31	0.44	0.00	0.00	0.00	0	4.00	0.59	2.64	1.55	9.38	10.50	
99	BH4.5	AI4.4	216	36	541.92	539.70	1.03	551.34	6.11	545.23	543.15	0.00700	1.51	7.89	0.97	0.57	0.00	0.00	0	4.80	0.71	2.64	1.87	55.75	67.69	
100																										
101	AI4.4	CI4.3	41	36	539.50	539.09	1.00	547.60	4.45	543.15	542.39	0.00750	0.31	8.15	1.03	0.00	0.45	0.00	0	5.50	0.71	2.64	1.87	57.63	66.70	
102	CI4.3	CI4.2	29	36	538.89	538.60	1.00	553.36	10.97	542.39	541.60	0.00790	0.23	8.41	1.10	0.56	0.00	0.00	0	4.00	0.68	2.64	1.80	59.42	66.70	
	CI4.2	FE4.1	78	36	538.40	536.75	2.13	553.37	12.54	540.83	540.18	0.00840	0.65	8.63	1.16	0.00	0.00	0.00	0	4.00	0.59	2.64	1.56	60.98	97.34	15 yr HW - 540.18
103	CI3.2	FE3.1	58	12	537.75	536.00	2.99	546.12	5.86	540.26	540.18	0.00090	0.05	1.35	0.03	0.03	0.00	0.00	0	4.00	0.40	2.64	1.06	1.06	6.16	15 yr HW - 540.18
104	OS2.2	EP2.1	27	12	537.85	536.55	4.86	539.10-462.56	1001.66																	
											537.55	7.90630														
														211.49	127.55252.62252.62		0.00	0.00	0	100.00	37.95	2.64	100.18100.18		7.85	ToP=537.55

<u>TOP ELEVATION:</u>

AI – TOP OF INLET STONE
DAI – TOP OF INLET STONE
BH – TOP OF THE INLET FRAME (R–2560–D5)
CI – TOP OF INLET STONE
MH – TOP OF FRAME AND COVER

<u>LEGEND:</u>

AI – AREA INLET
DAI – DOUBLE AREA INLET
BH – BEE HIVE GRATE INLET
CI – CURB INLET
FE – FLARED END SECTION
MH – MANHOLE

<u>NOTES:</u>

ALL SANITARY LATERAL AND SANITARY MAINS CROSSING UNDER PAVEMENT, IF TRENCHED, SHALL BE BACKFILLED WITH GRANULAR MATERIAL (AGGREGATE) AND COMPACTED.

IF THE STORM AND SANITARY SEWERS ARE PARALLEL AND IN THE SAME TRENCH OR OVERDIG, THE UPPER SHALL BE PLACED ON A SHELF AND THE LOWER SHALL BE BEDDED IN COMPACTED GRANULAR FILL TO THE FLOW LINE OF THE UPPER.

WHEN STORM SEWERS PIPES WHICH CROSS OVER EXISTING OR PROPOSED SANITARY SEWER OR WATER MAIN TRENCH, PROVIDE COMPACTED GRANULAR BACKFILL FROM THE TOP OF THE SANITARY SEWER OR WATER MAIN T THE BOTTOM OF THE STORM SEWER AND CONSTRUCT CONCRETE CRADLE TO THE RCP STORM SEWER PIPE AND CONCRETE ENCASE HDPE STORM SEWER PIPE WHEN IT IS MORE THAN 18 INCHES ABOVE THE SANITARY SEWER ACROSS THE FULL WIDTH OF THE TRENCH. WHEN THE STORM SEWER IS LESS THAN 18" SEPARATION, BOTH PIPES ARE TO BE ENCASED IN CONCRETE. PROVIDE TWENTY (20) FEET OF DUCTILE IRON PIPE WHERE THE SANITARY SEWER CROSSES OVER THE STORM SEWER TRENCH.

ALL STORM SEWERS MUST MAINTAIN A MINIMUM OF 36" COVER OVER THE TOP OF PIPE.

ONE FULL SECTION OF WATER PIPE SHALL BE CENTERED OVER THE TRENCH AT ALL WATER MAIN CROSSINGS.

City of O'Fallon Standard Subdivision Notes and Details – June 2010

PROJECT TITLE
IMPROVEMENT PLANS
THE VILLAGES AT MONTRACHET
STORM PROFILES

PRS No. 14055.MCHO.00R
TASK 001 FIELD BOOK 1476

PICKETT, RAY & SILVER INC
CIVIL ENGINEERING, LAND SURVEYING, AND NATURAL RESOURCES SERVICES
St. Peters
22 Richmond Center Court
St. Peters, MO 63376
Phone (636) 397-1211 Fax (636) 397-1104
www.prs3.com 1-800-708-3918

ENGINEERS AUTHENTICATION

THE RESPONSIBILITY FOR PROFESSIONAL ENGINEERING LIABILITY ON THIS PROJECT IS HEREBY LIMITED TO THE SET OF PLANS AUTHENTICATED BY THE SEAL, SIGNATURE, AND DATE HEREUNDER ATTACHED. RESPONSIBILITY IS DISCLAIMED FOR ALL OTHER ENGINEERING PLANS INVOLVED IN THIS PROJECT AND SPECIFICALLY EXCLUDES REVISIONS AFTER THIS DATE UNLESS REAUTHENTICATED.

PICKETT, RAY & SILVER, INC. MO
LICENSE #000325

Karl Anthony Schoenike

STATE OF MISSOURI
KARL ANTHONY SCHOENIKE
NUMBER PE-2003015039
PROFESSIONAL ENGINEER

01-25-16
ELECTRONIC SEAL
KARL A. SCHOENIKE, P.E.
PROFESSIONAL ENGINEER LICENSE 2003015039

Developer / Owner Information
MONTRACHET DEVELOPMENT LLC
218 Chesterfield Towne Centre
Chesterfield, Missouri 63005
Phone: 636-530-6900

P+Z No. 15-15.01

City No.
15-742-SP

Page No.
STORM PROFILES

PWSD #2 APPROVED 12/30/15

CITY OF O'FALLON APPROVED 01/25/16

DCSD APPROVED 11/30/15 PERMIT NUMBER 2015-2-005

\\PRS-SBS2011\Projects\14055.MCHO\dwg\design\OUTPUT\Improvement Plans\08-14055 STORM PROFILES.dwg