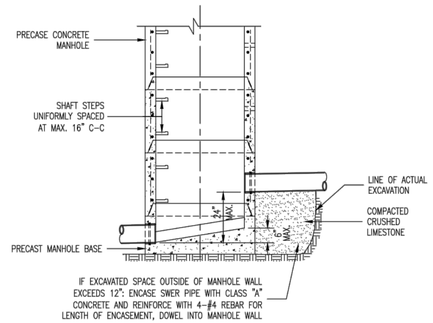

SECTION OF MANHOLE		DIMENSION
TOP TRANSITION	UPPER LOWER	26 1/2" DIA. 42" DIA.
BOTTOM SECTION	8" DIA. PIPE	42" DIA.
BOTTOM SECTION	10" THRU 36" DIA. PIPE	48" DIA.
BOTTOM SECTION	42" DIA. PIPE	60" DIA.

SEE A.S.T.M. C-478 FOR MINIMUM STEEL REQUIREMENTS.

NOTES:
1. ALL INVERTS SHALL HAVE POSITIVE DRAINAGE THROUGH MANHOLE.
2. BRICK SHALL NOT BE USED ON MANHOLES.

Duckett Creek Sanitary District

INSIDE FOULWATER DROP MANHOLE (SWEEP INLET) — Dwn By: BSM — App By: KA — Ckd By: MDOB — Date: DEC. 2015 — Detail No. 9

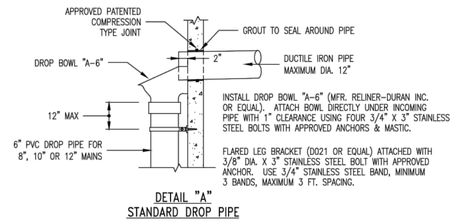

DETAIL "A"
STANDARD DROP PIPE

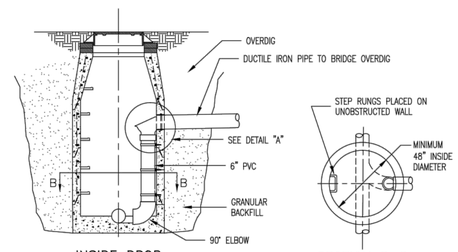

INSIDE DROP MANHOLE

SECTION B-B

NOTE:
ALL INVERTS SHALL HAVE POSITIVE DRAINAGE THROUGH MANHOLE.

Duckett Creek Sanitary District

INSIDE DROP MANHOLE — Dwn By: MSM — App By: KA — Ckd By: — Date: DEC. 2015 — Detail No. 10

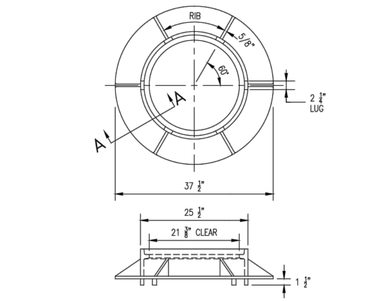

CAST IRON MANHOLE FRAME

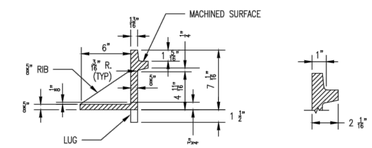

SECTION A-A
(230 lbs)

Duckett Creek Sanitary District

CAST IRON MANHOLE FRAME — Dwn By: BSM — App By: KLA — Ckd By: MDOB — Date: DEC. 2015 — Detail No. 11

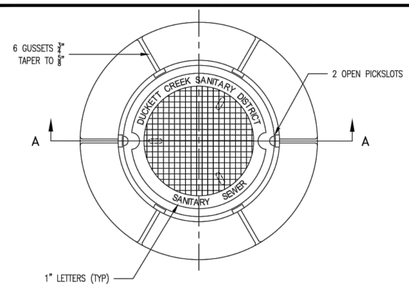

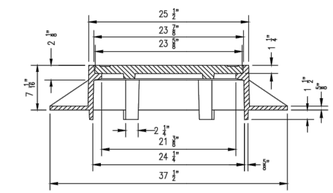

SECTION A-A

Duckett Creek Sanitary District

MANHOLE FRAME AND COVER — Dwn By: BSM — App By: KLA — Ckd By: MDOB — Date: DEC. 2015 — Detail No. 12

NOTE:
IF WATERTITE COVER REQUIRED USE APPROVED BUTYL RUBBER PREFORMED MASTIC SEALANT BETWEEN COVER AND FRAME.

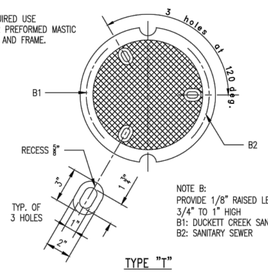

NOTE B:
PROVIDE 1/8" RAISED LETTERING APPROXIMATELY 3/4" TO 1" HIGH
B1: DUCKETT CREEK SANITARY DISTRICT
B2: SANITARY SEWER

TYPE "T"

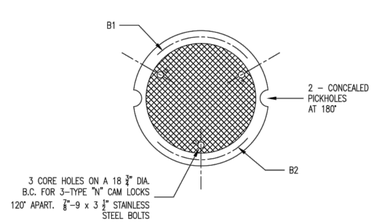

TYPE "N"

Duckett Creek Sanitary District

CAST IRON MANHOLE COVERS (LOCK TYPE) — Dwn By: BSM — App By: KLA — Ckd By: MDOB — Date: DEC. 2015 — Detail No. 14

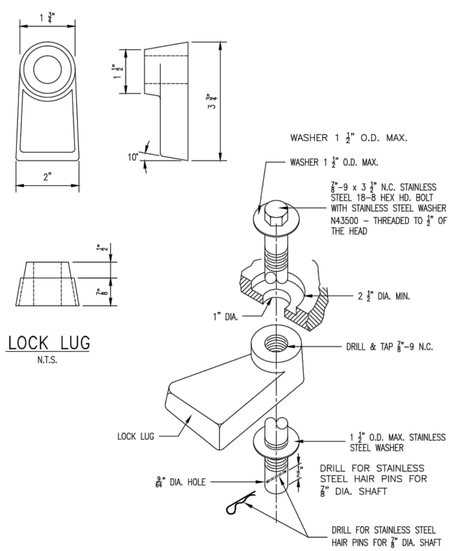

LOCK LUG
N.T.S.

Duckett Creek Sanitary District

LOCKING DEVICE FOR TYPE "N" LOCK TYPEMAN HOLE COVER — Dwn By: BSM — App By: KLA — Ckd By: MDOB — Date: DEC. 2015 — Detail No. 16

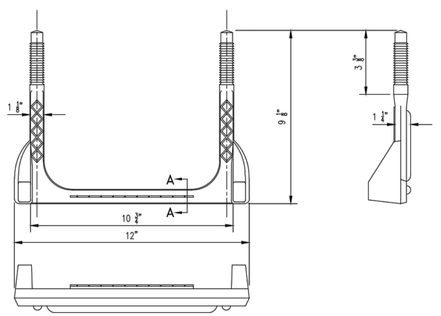

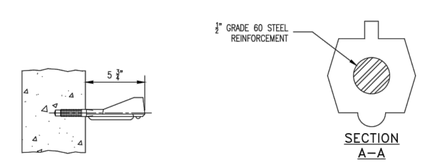

COPOLYMER POLYPROPYLENE PLASTIC

Duckett Creek Sanitary District

MANHOLE STEP FOR PRECAST MANHOLE — Dwn By: BSM — App By: KA — Ckd By: MDOB — Date: DEC. 2015 — Detail No. 18

SDR-35 x C900
BELL x SPIGOT ADAPERS

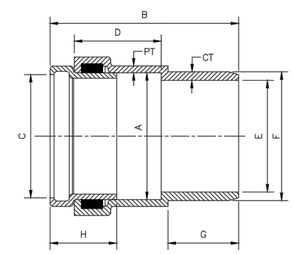

SIZE	CATALOG NO.	A	B	C	D	E	F	G	H	CT	PT
4"	334-040	4.56	8.23	4.25	4.10	3.94	4.80	2.72	2.7	.32	.25
6"	334-060	6.68	9.93	6.31	4.57	5.88	6.90	3.72	3.5	.45	.36

Duckett Creek Sanitary District

SDR-35 x C900 BELL AND SPIGOT ADAPTORS — Dwn By: BSM — App By: KA — Ckd By: MDOB — Date: DEC. 2015 — Detail No. 19A

City of O'Fallon Standard Subdivision Notes and Details – June 2010

PROJECT TITLE
IMPROVEMENT PLANS
THE VILLAGES AT MONTRACHET
DETAILS

PRS No. 14055.MCHO.00R
TASK 001 FIELD BOOK 1476

PICKETT, RAY & SILVER INC
CIVIL ENGINEERING, LAND SURVEYING, AND NATURAL RESOURCES SERVICES
St. Peters
22 Redmond Center Court
St. Peters, MO 63376
Phone (636) 397-1211 Fax (636) 397-1104
www.prs3.com 1-800-708-3918

PWSD #2 APPROVED 12/30/15

ENGINEERS AUTHENTICATION
THE RESPONSIBILITY FOR PROFESSIONAL ENGINEERING LIABILITY ON THIS PROJECT IS HEREBY LIMITED TO THE SET OF PLANS AUTHENTICATED BY THE SEAL, SIGNATURE, AND DATE HEREUNDER ATTACHED. RESPONSIBILITY IS DISCLAIMED FOR ALL OTHER ENGINEERING PLANS INVOLVED IN THIS PROJECT AND SPECIFICALLY EXCLUDES REVISIONS AFTER THIS DATE UNLESS REAUTHENTICATED.
PICKETT, RAY & SILVER, INC. MO
LICENSE #000325

STATE OF MISSOURI
KARL ANTHONY SCHOENIKE
NUMBER PE-2003015039
PROFESSIONAL ENGINEER

01-25-16 ELECTRONIC SEAL
KARL A. SCHOENIKE, P.E.
PROFESSIONAL ENGINEER LICENSE 2003015039

CITY OF O'FALLON APPROVED 01/25/16

Developer / Owner Information
MONTRACHET DEVELOPMENT LLC
218 Chesterfield Towne Centre
Chesterfield, Missouri 63005
Phone: 636-530-6900

P+Z No. 15-15.01

City No.
15-742-SP

Page No.
58 of 63
DETAILS

DCSD APPROVED 11/30/15 PERMIT NUMBER 2015-2-005

\\PRS-SRS2011\Projects\14055.MCHO\dwg\design\01TPLUT\improvement Plans\12-14055 DETAILS.dwg