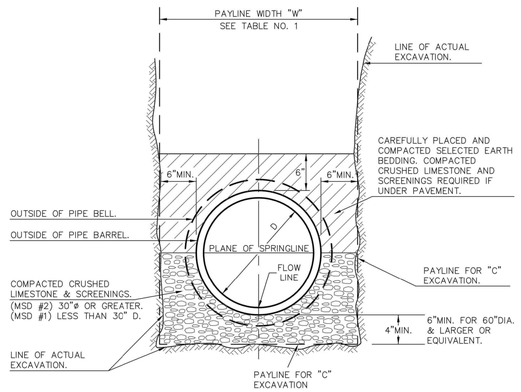

PIPE BEDDING CLASS "C" (MODIFIED FOR REINFORCED CONCRETE PIPE)	METROPOLITAN ST. LOUIS SEWER DISTRICT *Standard Details of Sewer Construction*		
	Dr. W.S.H. Ch. J.C.K.	2009	SHEET 5

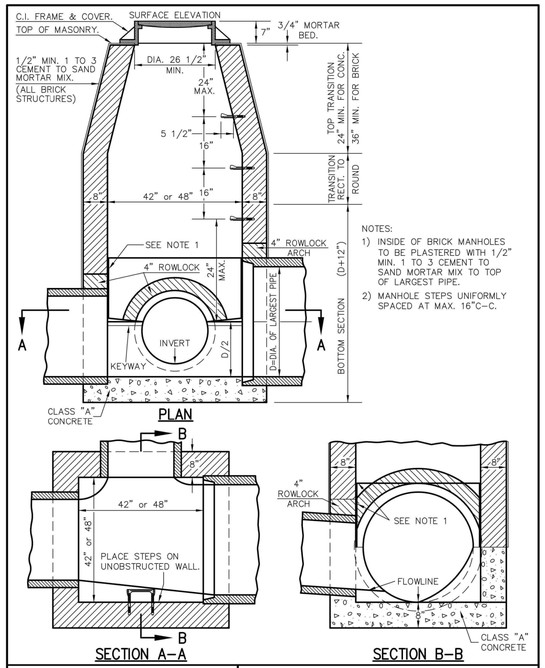

TYPICAL LINE MANHOLE ON PIPE SEWER 27" THRU 42" IN DIAMETER	METROPOLITAN ST. LOUIS SEWER DISTRICT *Standard Details of Sewer Construction*		
	Dr. WSH/SAM Ch. J.C.K.	2009	SHEET 11 (REV)

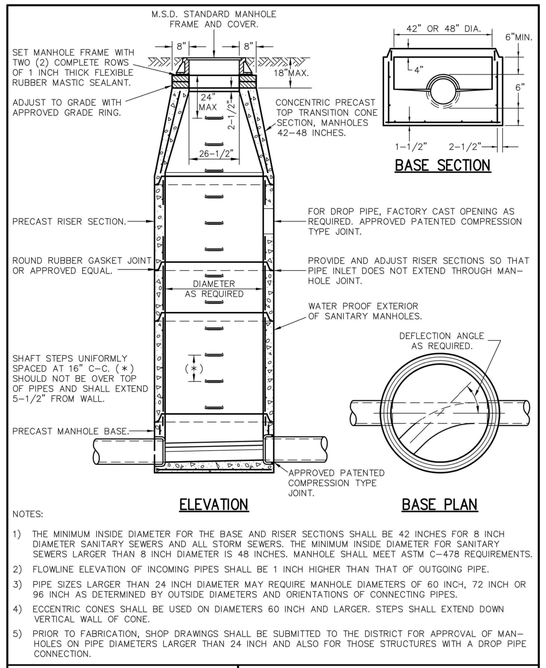

PRECAST CONCRETE MANHOLE	METROPOLITAN ST. LOUIS SEWER DISTRICT *Standard Details of Sewer Construction*		
	Dr. WSH/SAM Ch. J.C.K.	2009	SHEET 21 (REV)

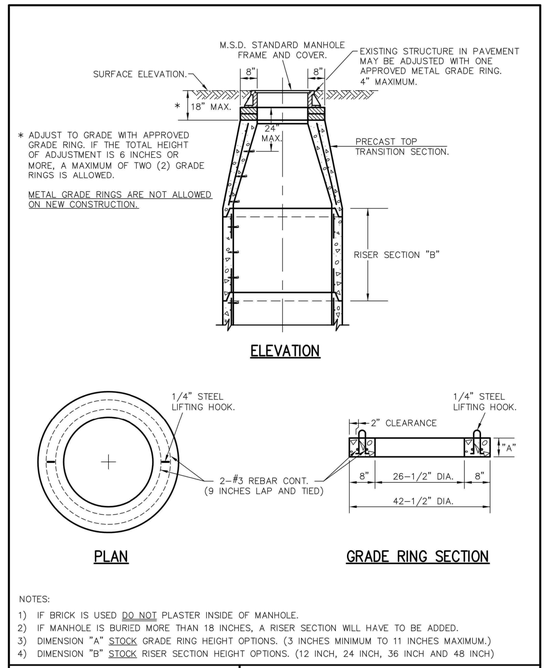

ADJUST TO GRADE	METROPOLITAN ST. LOUIS SEWER DISTRICT *Standard Details of Sewer Construction*		
	Dr. S.A.M. Ch. P.W.S.	2009	SHEET 23 (REV)

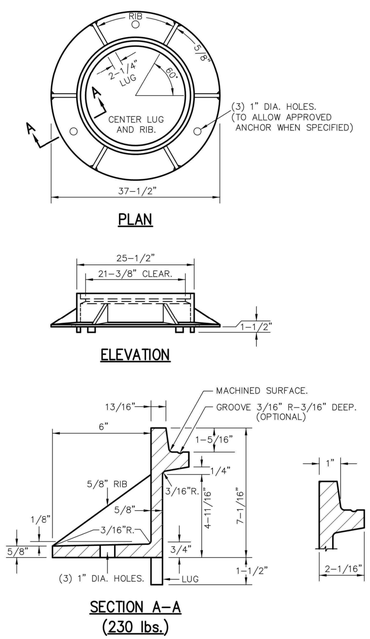

CAST IRON MANHOLE FRAME	METROPOLITAN ST. LOUIS SEWER DISTRICT *Standard Details of Sewer Construction*		
	Dr. DAB/SAM Ch. J.C.K.	2009	SHEET 52

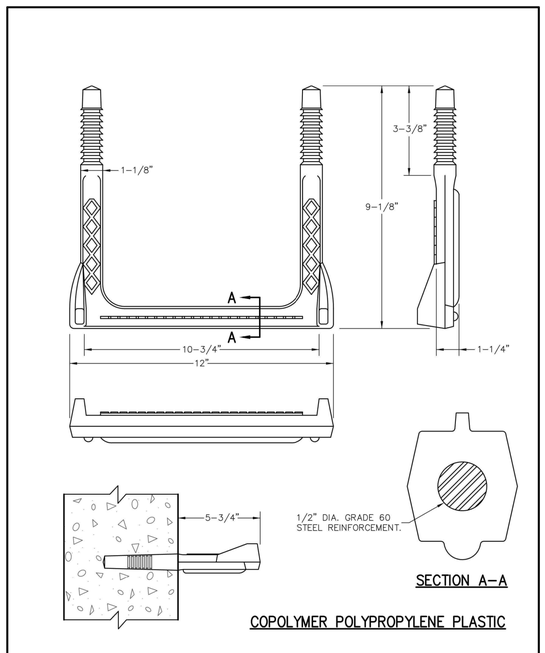

MANHOLE STEP FOR PRECAST & CAST-IN-PLACE MANHOLE	METROPOLITAN ST. LOUIS SEWER DISTRICT *Standard Details of Sewer Construction*		
	Dr. D.A.B. Ch. J.C.K.	2009	SHEET 58

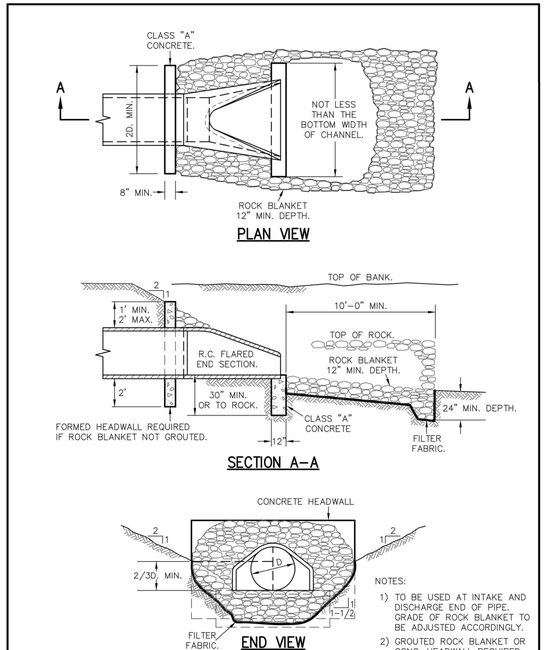

FLARED END SECTION	METROPOLITAN ST. LOUIS SEWER DISTRICT *Standard Details of Sewer Construction*		
	Dr. WSH/SAM Ch. J.C.K.	2009	SHEET 61

* All other Storm or Sanitary Sewer Details will be by M.S.D. Standards and Specifications.
** All inlets shall have 5/8" trash bar centered with the opening(s).

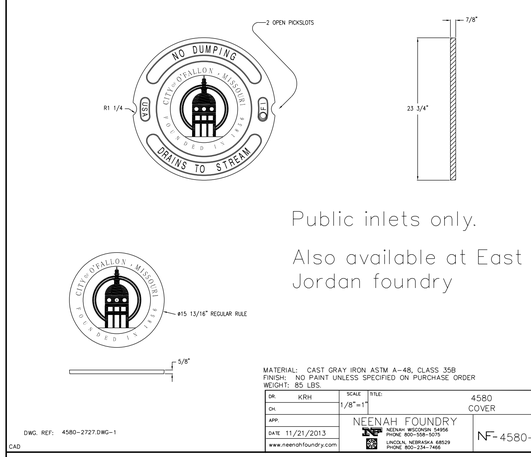

O'fallon Planning and Development Division File No.: 21-002817 | Approved: June 3, 2021

Lombardo
H·O·M·E·S
4 Research Park Drive, Suite 130
St. Charles, MO 63304
Phone: (636) 265-2710

VOLZ Incorporated
ENGINEERING
LAND PLANNING
LAND SURVEYING
ENVIRONMENTAL SERVICES
CONSTRUCTION MANAGEMENT
10849 Indian Head Ind'l. Blvd.
St. Louis, Missouri 63132
314.428.5212 Main
314.428.5215 Fax
www.volzinc.com
Authority #203

STATE OF MISSOURI
RYAN LEE HOLMES
NUMBER
PE-2017018988
PROFESSIONAL ENGINEER
03-01-22
RYAN L. HOLMES
Professional Engineer
PE-2017018988

THE VILLAS AT ARAGON

VETERANS MEMORIAL PARKWAY
O'FALLON, MO 63366

STORM SEWER CONSTRUCTION DETAILS

Parcel ID: 2-056C-S028-00-0001.10
Permit No. GR22-0000001
Volz Project # 22649

Design By: RLH
Drawn By: RLH
Checked By: RLH

03-31-22

G07