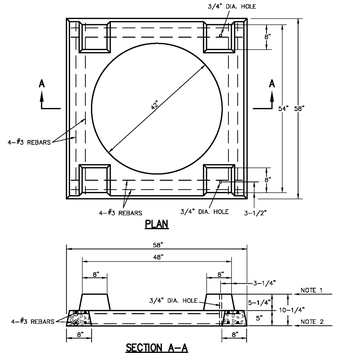

NOTES:
1) SET STANDARD INLET STONE IN 3/4" MORTAR BED AND DOWEL WITH 5/8" DIA. 1'–0" LONG PINS AND GROUT.
2) RAISE TO FINAL GRADE WITH COURSES OF BRICK AND SET THE UNIT TO BASE WITH 3/4" MORTAR BED.
3) THIS UNIT TO BE USED WITH 42 INCH I.D. BASE.
4) 5000 P.S.I. CONCRETE IS REQUIRED.

PRECAST CONCRETE UNIT FOR 4 WAY AREA INLET	METROPOLITAN ST. LOUIS SEWER DISTRICT *Standard Details of Sewer Construction*		
	Dr. DAB/SAM Ch. J.C.K.	2009	SHEET 40

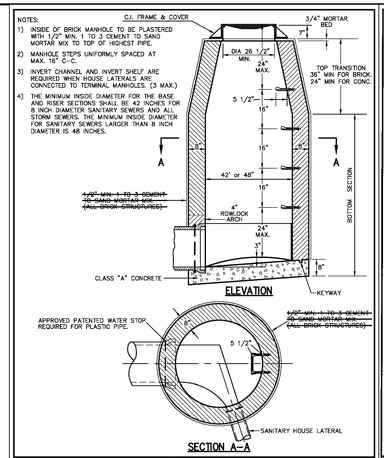

TERMINAL MANHOLE	METROPOLITAN ST. LOUIS SEWER DISTRICT *Standard Details of Sewer Construction*		
	Dr. WSH/SAM Ch. J.C.K.	2009	SHEET 20

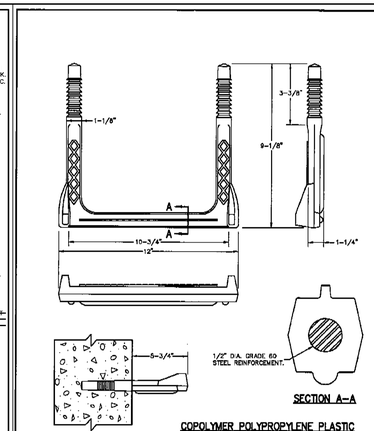

MANHOLE STEP FOR PRECAST & CAST–IN–PLACE MANHOLE	METROPOLITAN ST. LOUIS SEWER DISTRICT *Standard Details of Sewer Construction*		
	Dr. D.A.B. Ch. J.C.K.	2009	SHEET 58

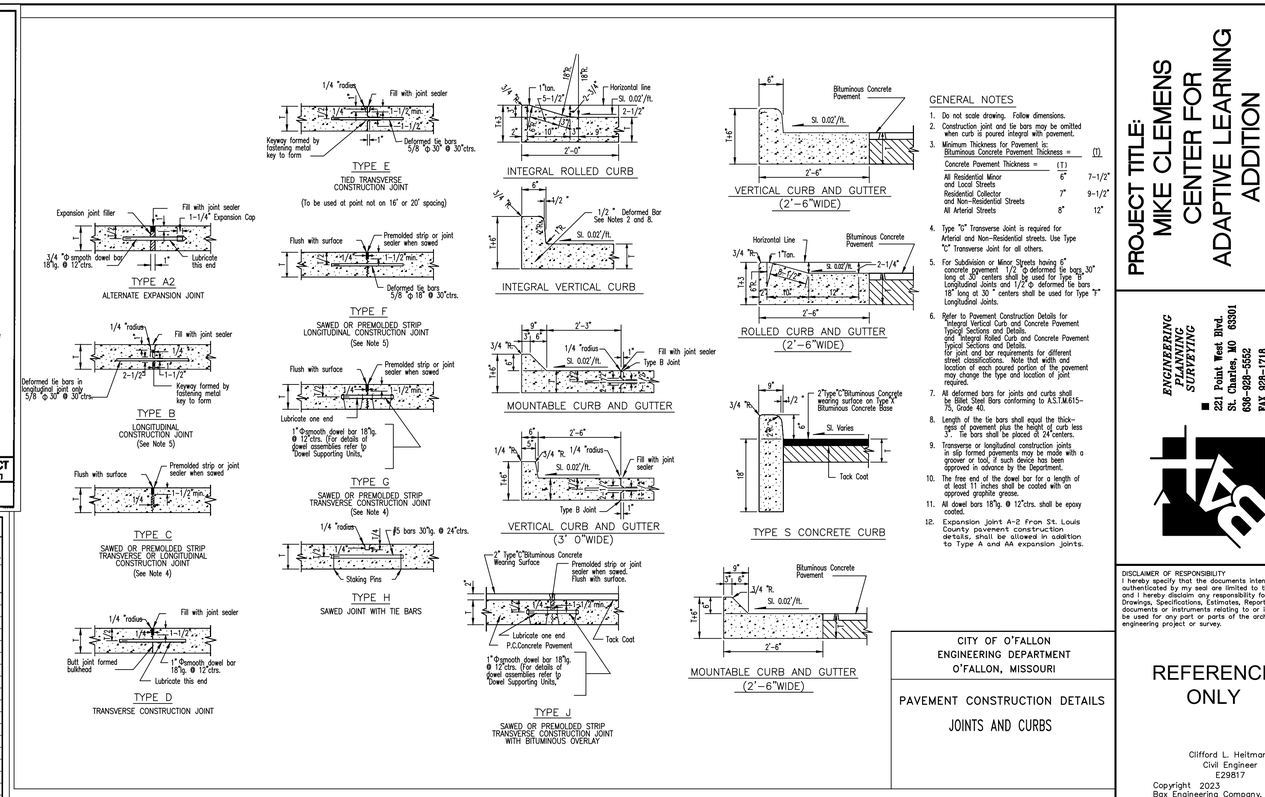

GENERAL NOTES

1. Do not scale drawing. Follow dimensions.
2. Construction joint and tie bars may be omitted when curb is poured integral with pavement.
3. Minimum Thickness for Pavement is:

Bituminous Concrete Pavement Thickness =	(1)
Concrete Pavement Thickness =	(1)
All Residential Minor and Local Streets	6" 7–1/2"
Residential Collector and Non–Residential Streets	7" 9–1/2"
All Arterial Streets	8" 12"

4. Type "G" Transverse Joint is required for Arterial and Non–Residential streets. Use Type "C" Transverse Joint for all others.
5. For Subdivision or Minor Streets having 6" concrete pavement 1/2 ϕ deformed tie bars 30" long at 30" centers shall be used for Type "B" Longitudinal Joints and 1/2 ϕ deformed tie bars 18" long at 30 " centers shall be used for Type "F" Longitudinal Joints.
6. Refer to Pavement Construction Details for "Integral Vertical Curb and Concrete Pavement Typical Sections and Details, and "Integral Rolled Curb and Concrete Pavement Typical Sections and Details. for joint and bar requirements for different street classifications. Note that width and location of each poured portion of the pavement may change the type and location of joint required.
7. All deformed bars for joints and curbs shall be Billet Steel Bars conforming to A.S.T.M.615–73, Grade 40.
8. Length of the tie bars shall equal the thickness of pavement plus the height of curb less 3". tie bars shall be placed at 24"centers.
9. Transverse or longitudinal construction joints in slip formed pavements may be made with a groover or tool, if such device has been approved in advance by the Department.
10. The free end of the dowel bar for a length of at least 11 inches shall be coated with an approved graphite grease.
11. All dowel bars 18"lg. @ 12"ctrs. shall be epoxy coated.
12. Expansion joint A–2 from St. Louis County pavement construction details, shall be allowed in addition to Type A and AA expansion joints.

CITY OF O'FALLON ENGINEERING DEPARTMENT O'FALLON, MISSOURI
PAVEMENT CONSTRUCTION DETAILS
JOINTS AND CURBS

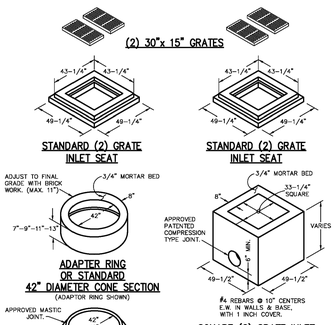

#4 REBARS @ 10" CENTERS E.W. IN WALLS & BASE, WITH 1 INCH COVER.

NOTE:
INLETS ON THIS SHEET ARE TO BE USED IN LOCATIONS WHERE STANDARD OPEN THROAT INLETS CANNOT BE USED IN PAVED TRAFFIC WAY AND IN LIMITED EASEMENTS.

SEE CHART FOR MINIMUM DIMENSIONS.

2 GRATE INLETS PRECAST CONCRETE	METROPOLITAN ST. LOUIS SEWER DISTRICT *Standard Details of Sewer Construction*		
	Dr. JLG/SAM Ch. J.C.K.	2009	SHEET 35

ROUND PIPE				HORIZONTAL ELLIPTICAL PIPE			
INSIDE DIAMETER OF PIPE (INCHES)	"W" PAYLINE WIDTH OF TRENCH (INCHES)	"w" PAYLINE WIDTH OF TRENCH (FEET)	PAY–VOLUMES CU. FT. PER FT. CONCRETE ENCASEMENT	INSIDE DIMENSIONS OF PIPE (INCHES)	"W" PAYLINE WIDTH OF TRENCH (INCHES)	"W" PAYLINE WIDTH OF TRENCH (FEET)	PAY–VOLUMES CU. FT. PER FT. CONCRETE ENCASEMENT
4	30	2.50	3.28				
6	30	2.50	3.59				
8	30	2.50	3.87				
10	30	2.50	4.09				
12	30	2.50	4.25				
15	36	3.00	5.55				
18	36	3.00	5.77	14 x 23	41	3.42	5.94
21	39	3.25	6.61				
24	42	3.50	7.39	19 x 30	49	4.08	7.68
27	45	3.75	8.18	22 x 34	53	4.42	8.61
30	49	4.08	9.30	24 x 38	58	4.83	9.70
33	53	4.42	10.53	27 x 42	62	5.17	10.71
36	56	4.67	11.43	29 x 45	66	5.50	11.72
39	DISCONTINUED			32 x 49	71	5.92	13.14
42	63	5.25	13.38	34 x 53	75	6.25	14.05
48	70	5.83	15.67	38 x 60	83	6.92	16.18
54	77	6.42	18.15	43 x 68	92	7.67	18.81
60	84	7.00	20.73	48 x 76	101	8.42	21.59
66	91	7.58	23.45	53 x 83	109	9.08	24.35
72	98	8.17	26.37	58 x 91	118	9.83	27.45
78	105	8.75	29.39	63 x 98	126	10.50	30.50
84	112	9.33	32.57	68 x 106	135	11.25	33.91
90	119	9.92	35.90	72 x 113	143	11.92	36.99
96	126	10.50	39.37	77 x 121	152	12.67	40.69
102	133	11.08	42.99	82 x 128	160	13.33	44.45
108	140	11.67	46.75	87 x 136	168	14.00	47.79
114	147	12.25	50.66	92 x 143	176	14.67	51.70
120	154	12.83	54.72	97 x 151	185	15.42	56.01
126	161	13.42	58.92				
132	168	14.00	63.27	106 x 166	202	16.83	64.48
144	182	15.17	72.40	116 x 180	218	18.17	73.59

TABLE 1 PAYLINE WIDTHS OF TRENCH AND PAY–QUANTITIES OF CONCRETE	METROPOLITAN ST. LOUIS SEWER DISTRICT *Standard Details of Sewer Construction*		
	Dr. B.E.B. Ch. J.C.K.	2009	SHEET 1

Manufacturer	Size	Adhesive	Style	Message (Part #)	Website
ACP International	3 7/8"	Epoxy	Crystal Cap	No Dumping Drains To Waterways (SD–W–CC)	www.acpinternational.com
DAS Manufacturing, Inc.	4"	Epoxy	Standard	No Dumping Drains To Stream (#SDS)	www.dasmanufacturing.com

NOTE:
INLET FILTERS ARE TO BE INPECTED EVERY 6 MONTHS.

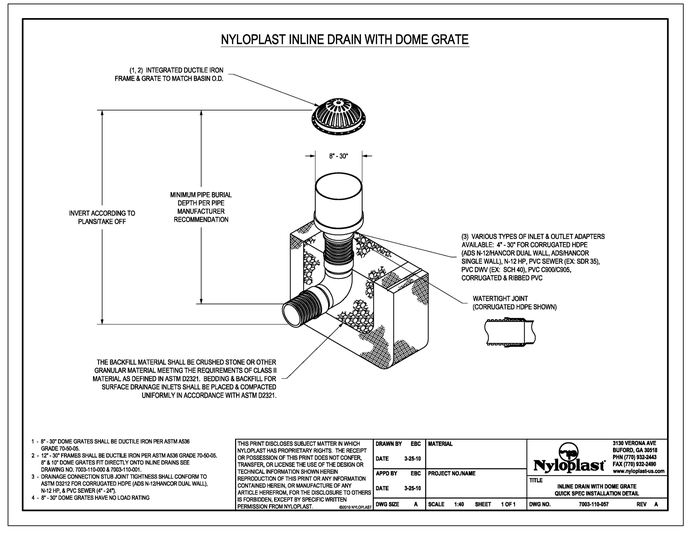

DETAILS ON THIS SHEET ARE REFERENCE ONLY

BID SET

PROJECT TITLE: MIKE CLEMENS CENTER FOR ADAPTIVE LEARNING ADDITION

Bax Project #98-1000TL | Issue Date: 01/18/2023

ENGINEERING PLANNING SURVEYING
221 Point West Blvd.
St. Charles, MO 63301
636-928-5552
FAX 928-1718

DISCLAIMER OF RESPONSIBILITY
I hereby specify that the documents intended to be authenticated by my seal are limited to this sheet, and I hereby disclaim any responsibility for all other Drawings, Specifications, Estimates, Reports or other documents or instruments relating to or intended to be used for any part or parts of the architectural or engineering project or survey.

REFERENCE ONLY

Clifford L. Heitmann
Civil Engineer
E29817

Copyright 2023
Bax Engineering Company, Inc.
Engineering Authority No. 000655
Surveying Authority No. 000144
All Rights Reserved

ORIGINAL ISSUE DATE
01–18–2023

REVISIONS

01–10–2023	PERMIT SET
01–18–2023	BID SET
02–10–2023	ADDENDUM 2
02–14–2023	CITY COMMENTS
02–24–2023	ADDENDUM 4
02–28–2023	CITY COMMENTS

Developer / Owner:
FORT ZUMWALT SCHOOL DISTRICT
555 EAST TERRA LANE
O'FALLON, MO 63366

SEWER DETAILS

P+Z No.
#22-010172
APPROVED 11-03-22
City No.
#14-400

Page No.
C12.0
MIKE CLEMENS CENTER ADDITIONS AND RENOVATIONS