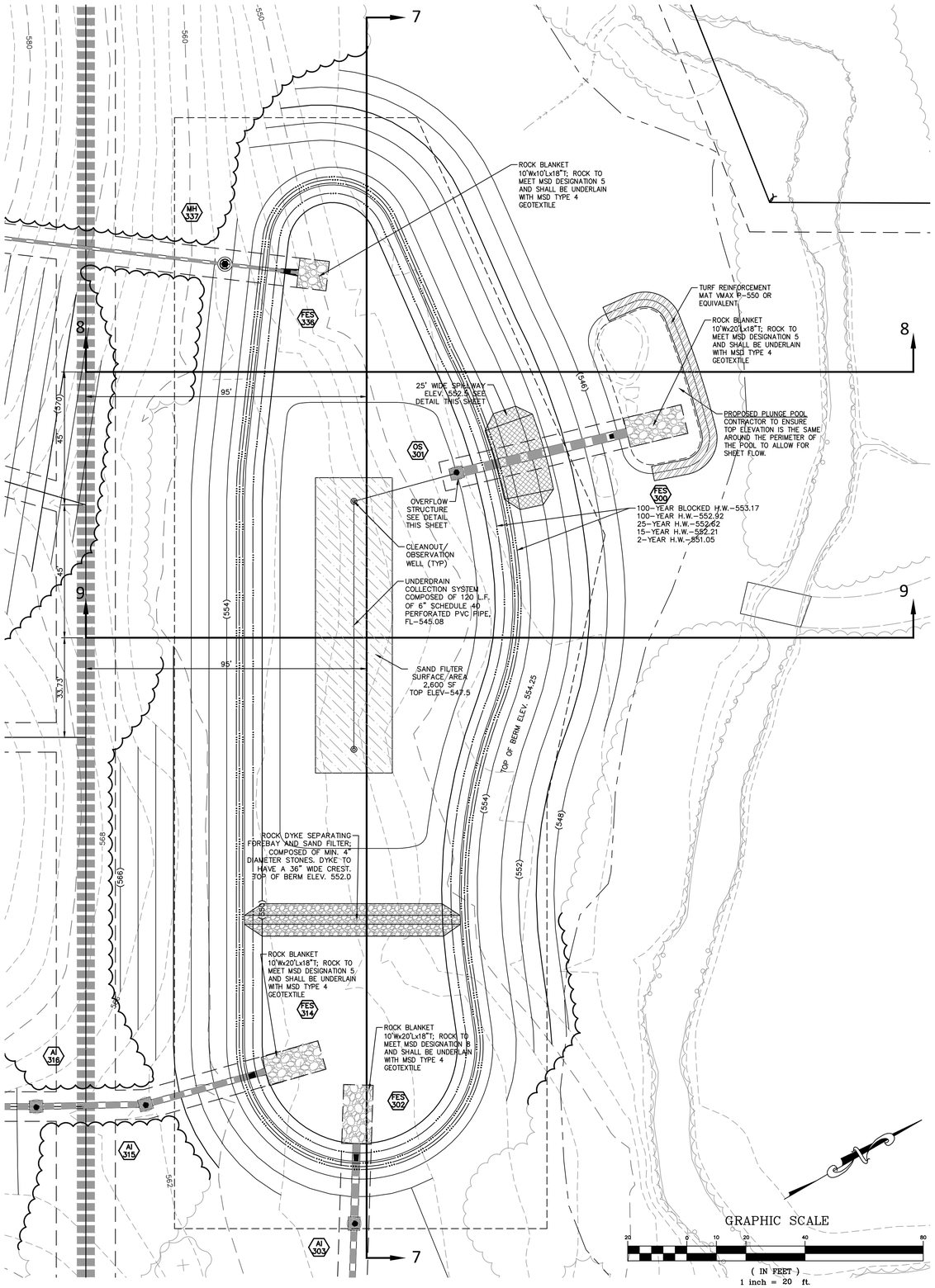

ISSUE	DATE / REMARKS
1	8-10-2016 Initial Submittal
2	9-1-2016 PWSD #2 & DCSD Comments
3	10-24-16 City Comments
4	11-15-16 DCSD Comments
5	12-12-16 City Comments
6	12-28-16 DCSD Comments
7	1-18-17 PWSD #2 Comments
8	1-26-17 Fire District Comments
9	1-27-17 City Comments
10	3-1-17 City Comments

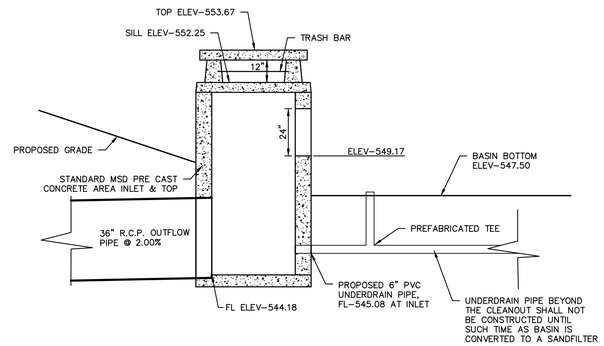

OVERFLOW STRUCTURE 301
SIDE SECTION
NTS

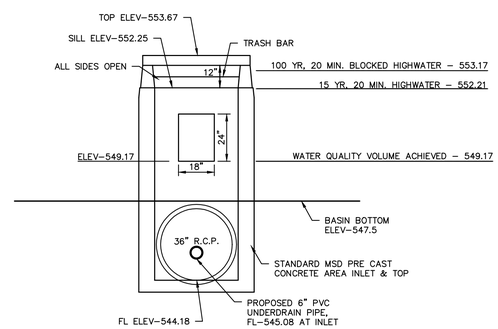

OVERFLOW STRUCTURE 301
FRONT ELEVATION
NTS

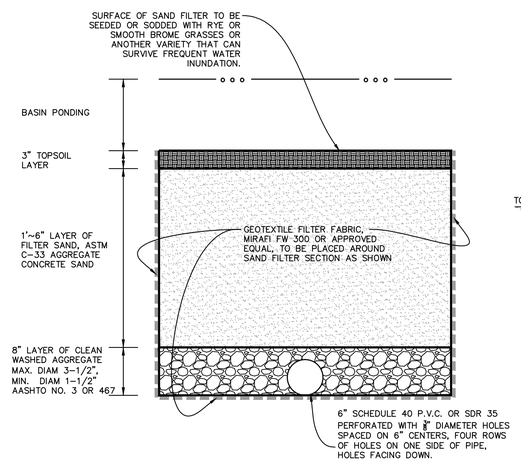

TYPICAL SECTION SAND FILTER
N.T.S.

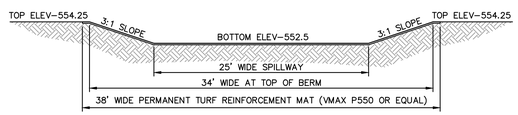

SPILLWAY CROSS SECTION
N.T.S.

PROJECT TITLE

WESTLEIGH

O'FALLON, MISSOURI

THE STERLING CO.
ENGINEERS & SURVEYORS
5055 New Baumgartner Road
St. Louis, Missouri 63129
Ph 314-487-0440 Fax 314-487-8944
www.sterling-eng-sur.com
Corporate Certificate of Authority #001348

The Professional Engineer's seal, signature and date on these plans are the seal, signature and date on the original drawing or document. All reuse, reproduction or modification of these documents not bearing the seal and signature shall not be considered authorized by the Professional Engineer. Electronic copies of documents are not to be used for shop drawings or documents not bearing the seal and signature.

STATE OF MISSOURI
RODNEY ARNOLD
NUMBER PE-2002016612
PROFESSIONAL ENGINEER

Date: *3/01/2017*
RODNEY ARNOLD
LICENSE # PE-2002016612
Civil Engineer

Lombardo Homes of St. Louis, LLC
2299 Technology Drive, Suite 150
O'Fallon, Missouri 63368
Ph. (636) 265-2710
Fax (636) 695-3195
www.lombardohomesstlouis.com

BASIN C

P+Z No.	P&Z NO
City No.	15-162-SP
Date:	3/01/2017
Job No.	14-10-348

Page No.

10.5

IMP

"Final Plan" Approval Date: October 1, 2015 (31-15.01)

Drawing name: V:\14\10348 Mollison Tract\Drawings\Engineering\Improvements\10348 IMP.dwg Plotted on: Mar 01, 2017 - 10:59am Plotted by: bmoller