# CONSTRUCTION DETAILS

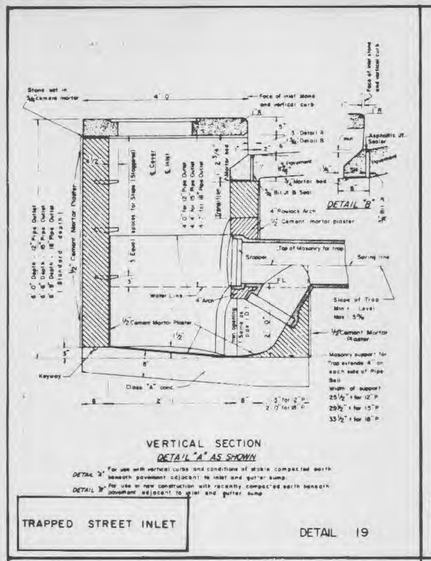


TRAPPED STREET INLET — DETAIL 19

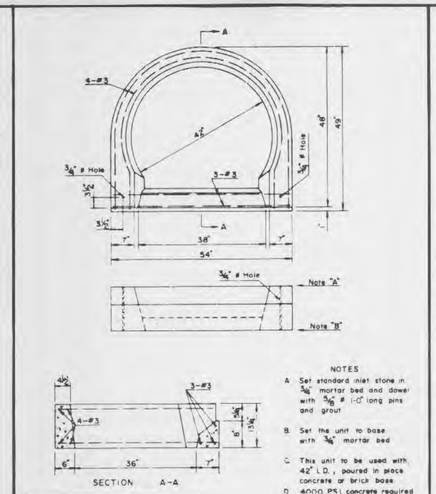


NOTES

A. Set standard inlet stone in ¾" mortar bed and dowel with ⅜" ø 1'-0" long pins and grout

B. Set the unit to base with ¾" mortar bed

C. This unit to be used with 42" I.D., poured in place concrete or brick base

D. 4000 P.S.I. concrete required

PRE-CAST CONCRETE UNIT FOR SINGLE CURB INLET — DETAIL 20

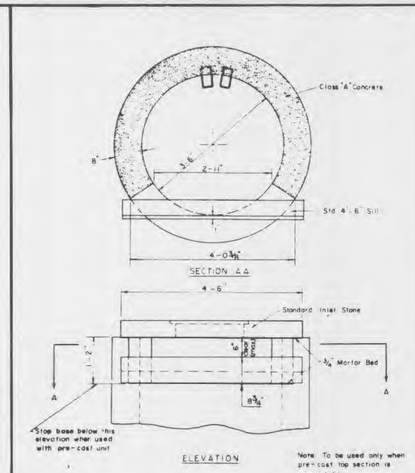


Note: To be used only when pre-cast top section is unavailable

ALTERNATE CONCRETE SINGLE STREET INLET — DETAIL 21

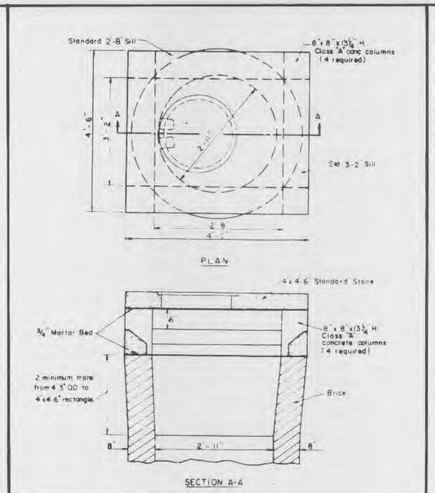


BRICK AREA INLET OPEN 4 SIDES — DETAIL 22

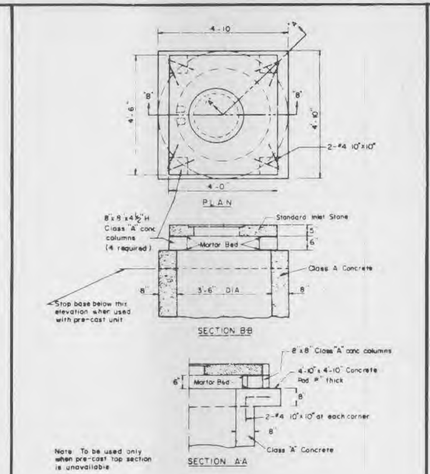


Note: To be used only when pre-cast top section is unavailable

ALTERNATE CONCRETE AREA INLET OPEN 4 SIDES — DETAIL 23

DETAIL 24

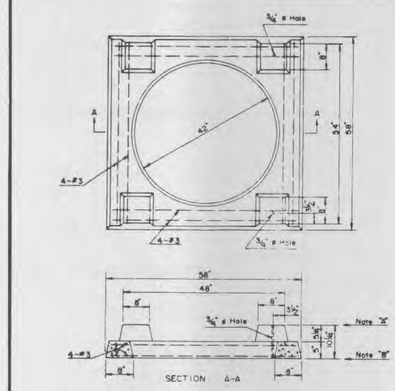


4000 P.S.I. concrete required.

NOTES

A. Set standard inlet stone in ¾" mortar bed and dowel with ⅜" ø 1'-0" long pins and grout

B. Set the unit to base with ¾" mortar bed.

C. This unit to be used with 42" I.D., poured in place concrete or brick base.

PRE-CAST CONCRETE UNIT FOR 4 WAY AREA INLET

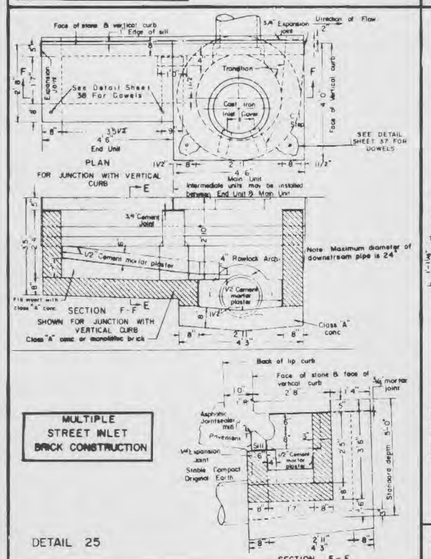


MULTIPLE STREET INLET BRICK CONSTRUCTION — DETAIL 25

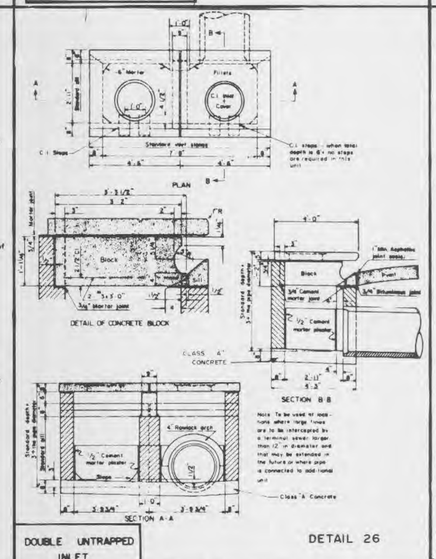


DOUBLE UNTRAPPED INLET — DETAIL 26

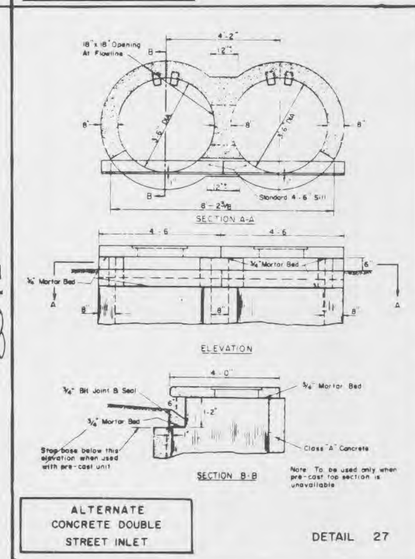


Note: To be used only when pre-cast top section is unavailable

ALTERNATE CONCRETE DOUBLE STREET INLET — DETAIL 27

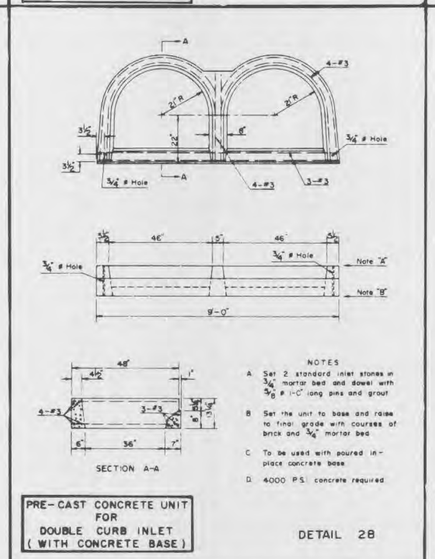


NOTES

A. Set 2 standard inlet stones in ¾" mortar bed and dowel with ⅜" ø 1'-0" long pins and grout

B. Set the unit to base and raise to final grade with courses of brick and ¾" mortar bed

C. To be used with poured in-place concrete base

D. 4000 P.S.I. concrete required

PRE-CAST CONCRETE UNIT FOR DOUBLE CURB INLET (WITH CONCRETE BASE) — DETAIL 28

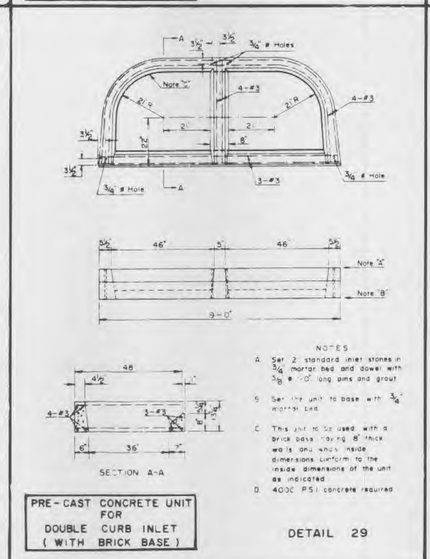


NOTES

A. Set 2 standard inlet stones in ¾" mortar bed and dowel with ⅜" ø 1'-0" long pins and grout

B. Set the unit to base with ¾" mortar bed

C. This unit to be used with a brick base having 8" thick walls only which inside dimensions conform to the inside dimensions of the unit as indicated

D. 4000 P.S.I. concrete required

PRE-CAST CONCRETE UNIT FOR DOUBLE CURB INLET (WITH BRICK BASE) — DETAIL 29

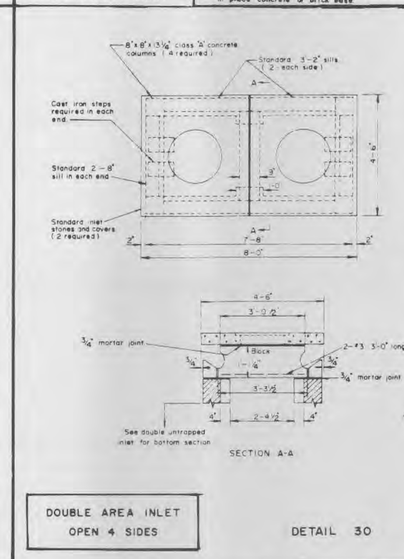


DOUBLE AREA INLET OPEN 4 SIDES — DETAIL 30

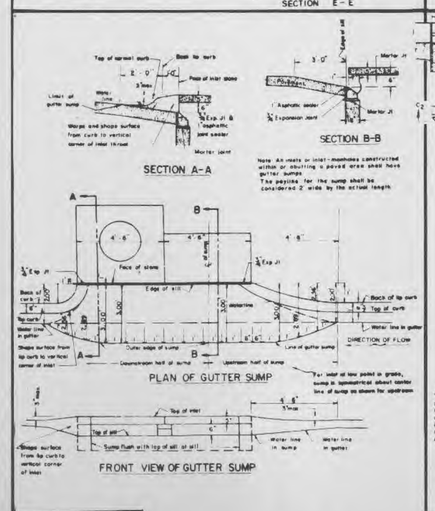


GUTTER SUMP FOR LIP CURB — DETAIL 31

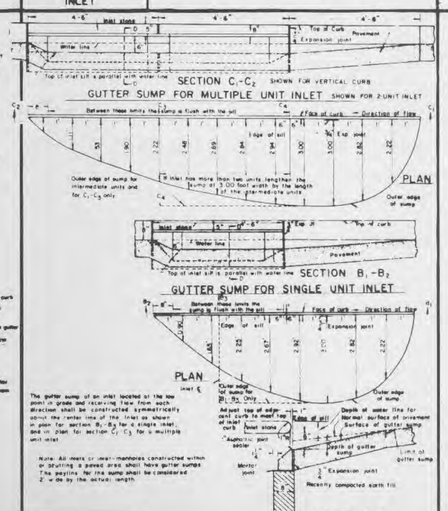


GUTTER SUMPS FOR VERTICAL CURB — DETAIL 32

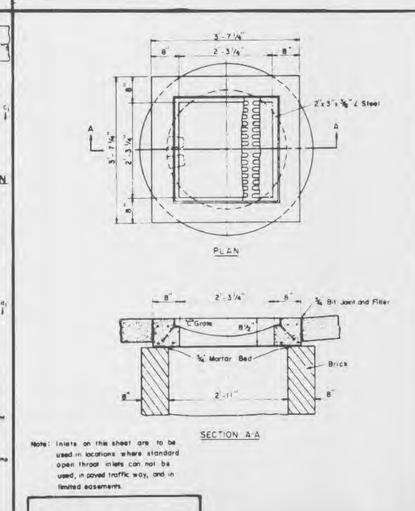


Note: Inlets on this sheet are to be used in locations where standard open throat inlets can not be used, in paved traffic way, and in limited easements.

2 GRATE INLET — DETAIL 33

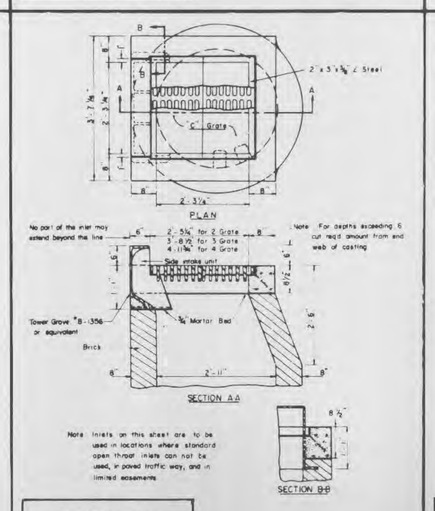


Note: Inlets on this sheet are to be used in locations where standard open throat inlets can not be used, in paved traffic way, and in limited easements.

2 GRATE INLET WITH SIDE INTAKE UNIT — DETAIL 34

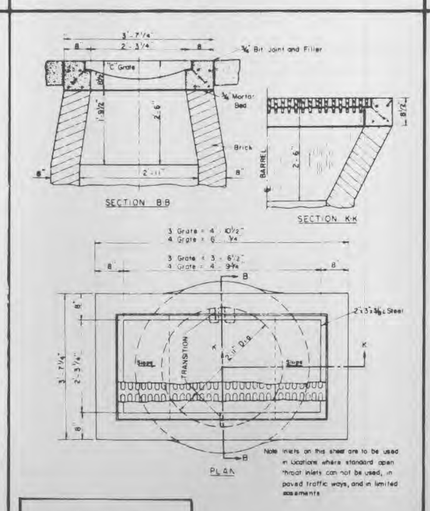


Note: Inlets on this sheet are to be used in locations where standard open throat inlets can not be used, in paved traffic ways, and in limited easements

3&4 GRATE INLET — DETAIL 35

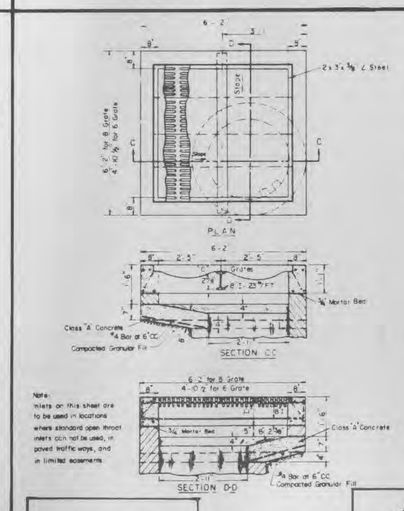


Note: Inlets on this sheet are to be used in locations where standard open throat inlets can not be used, in paved traffic ways, and in limited easements

6&8 GRATE INLET — DETAIL 36