DUCKETT CREEK SANITARY DISTRICT NOTES (DCSD):

1. EXISTING SANITARY SEWER SERVICE SHALL NOT BE INTERRUPTED.
2. CONNECTION TO DCSD SANITARY SEWERS REQUIRES DCSD INSPECTION. CONTACT STEVE OVERBEY, DCSD CHIEF INSPECTOR, AT 636-441-1244 TO SCHEDULE INSPECTION. 48 HOURS ADVANCE NOTICE IS REQUIRED
3. NOTE: CONNECTION FEES FOR THIS DEVELOPMENT WILL NOT BE REQUIRED. CONNECTION FEES FOR THIS LOT WERE PAID BY ACREAGE BY DUNKIN' DONUTS DEVELOPER.
4. NOTE: PROPOSED SEWER MANHOLE THAT IS USED AS CONNECTION POINT HAS YET TO BE PERMITTED. THIS CONNECTION WILL NOT BE APPROVED UNTIL MANHOLE IS PERMITTED, INSTALLED, TESTED, AND ?&?0 RELEASE OF ESCROW HAS BEEN DONE.

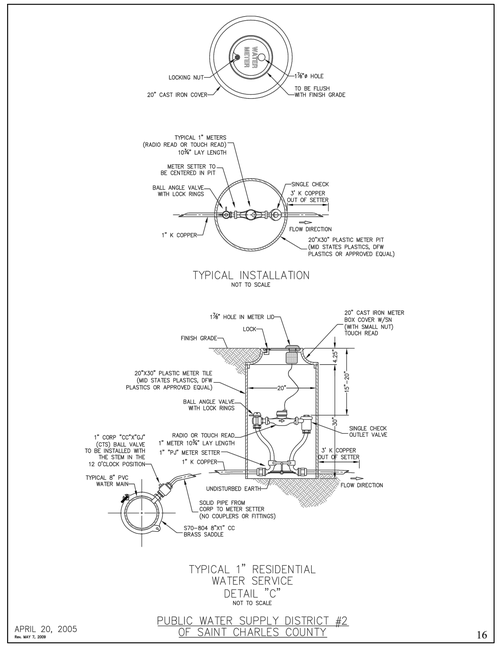

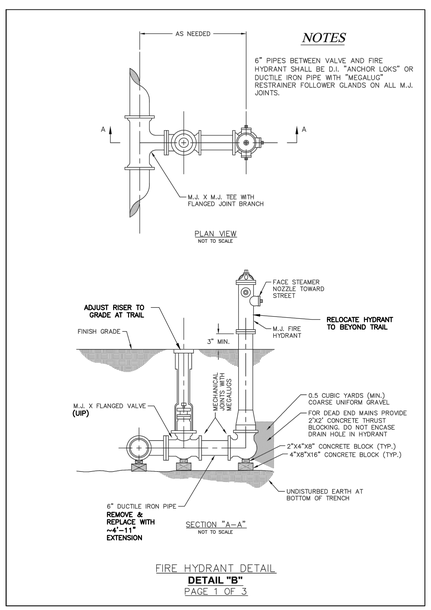

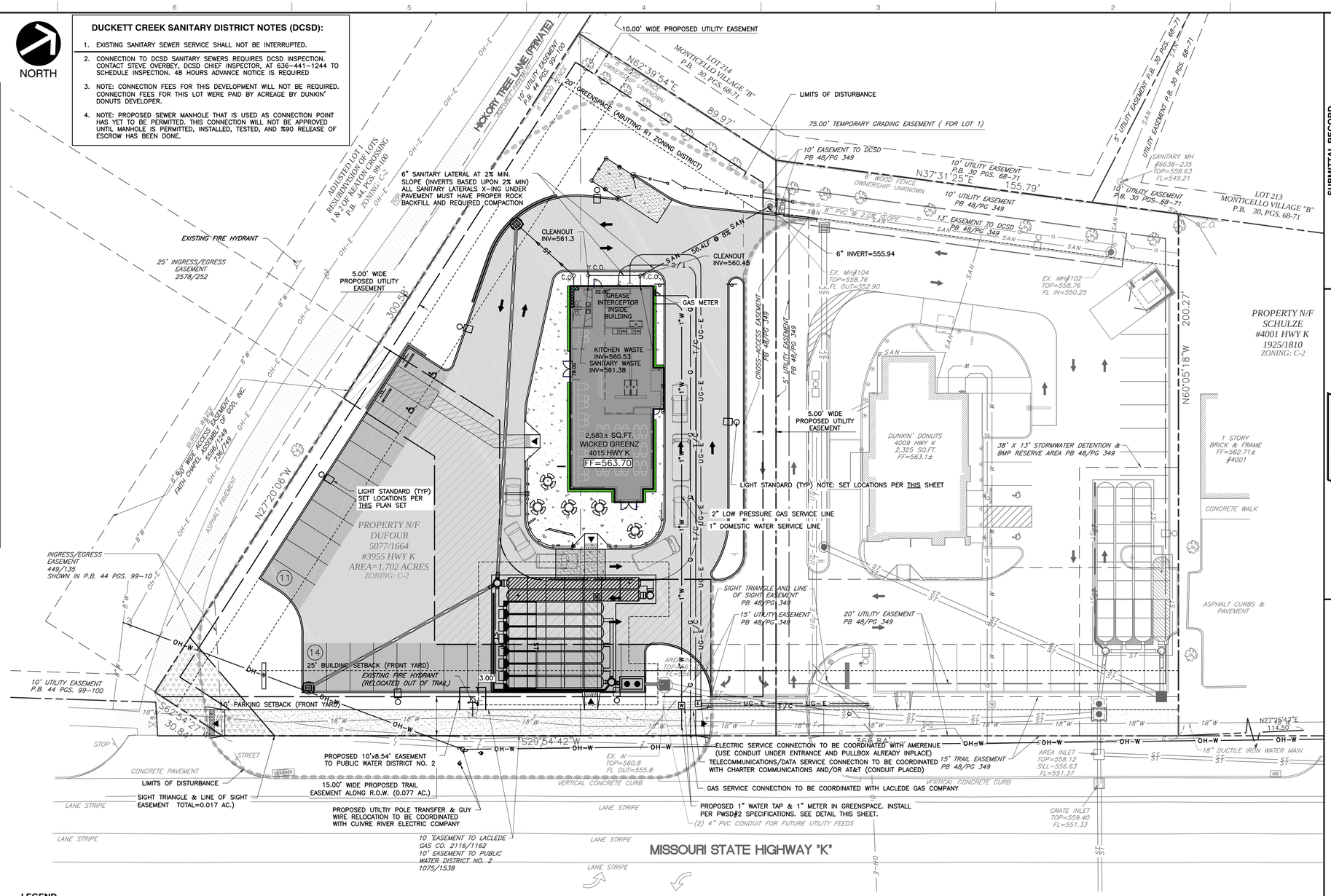

LEGEND

EXISTING:

- PROPERTY LINE
- PROPERTY LINE ADJOINER
- EASEMENT LINE
- –EXISTING WOOD PRIVACY FENCE
- –EXISTING CURB
- –EXISTING LANE STRIPE
- –EXISTING STORM SEWER LINE
- –EXISTING SANITARY SEWER LINE
- –EXISTING OVERHEAD ELECTRIC LINE
- –EXISTING WATER LINE (SIZE INDICATED)
- –EXISTING GAS LINE
- –EXISTING TELEPHONE LINE
- –EXISTING STORM INLET
- –EXISTING STORM MANHOLE
- –EXISTING SANITARY MANHOLE
- –EXISTING FIRE HYDRANT
- –EXISTING WATER VALVE
- –EXISTING LIGHT POLE
- –EXISTING TRAFFIC STRUCTURE
- –EXISTING GAS VALVE
- –EXISTING CLEANOUT
- –EXISTING SIGN
- –EXISTING UTILITY POLE
- –EXISTING POLE GUY

PROPOSED:

- –SETBACK LINES (PER ZONING ORDINANCE)
- –PROPOSED BLOCK RETAINING WALL
- –PROPOSED SIGHT-PROOF FENCE
- –PROPOSED DECORATIVE RAILING
- –PROPOSED WATER SERVICE LINE (SIZE DENOTED)
- –PROPOSED UNDERGROUND ELECTRIC SERVICE
- –PROPOSED OVERHEAD WIRES (POLE TRANSFER)
- –PROPOSED UNDERGROUND GAS SERVICE LINE
- –PROPOSED UNDERGROUND TELECOMMUNICATIONS SERVICE LINE
- –PROPOSED SANITARY LATERAL
- –PROPOSED STORM WATER SEWER PIPE
- –PROPOSED DOWNSPOUT DRAIN PIPE W/ DIRECTION OF FLOW
- –PROPOSED WATER METER
- –PROPOSED (RELOCATED) HYDRANT
- –PROPOSED CONCRETE ADA ACCESSIBLE RAMP (5% < SLOPE < 8.33%).
- –PROPOSED BOLLARD
- –PROPOSED SIGNAGE
- –PROPOSED LIGHT POLE (SEE LIGHTING PLAN)
- –PROPOSED UTILITY POLE AND GUY WIRE
- –PROPOSED GRATED INLET W/ SIDE INTAKE
- –PROPOSED SANITARY AND STORM CLEANOUT
- –EXPOSED FOUNDATION
- –PROPOSED ASPHALT TRAIL
- –PROPOSED HEAVY DUTY ASPHALT
- –PROPOSED LIGHT DUTY ASPHALT
- –PROPOSED CONCRETE WALK
- –PROPOSED HEAVY DUTY CONCRETE
- –PROPOSED CROSS-ACCESS EASEMENT
- –PROPOSED EASEMENT OTHER
- –PROPOSED U/G STORMWATER & BMP AREA
- –PROPOSED SIGHT TRIANGLE & LINE OF SIGHT EASEMENT

SHOWN FOR REFERENCE ONLY — DETECTABLE WARNING SURFACE

Y.C.O.o o C.O.

NOTES:

1. SEE SHEET C001 FOR GENERAL NOTES
2. CONTRACTOR SHALL REFER TO OTHER PLANS WITHIN THIS CONSTRUCTION SET FOR OTHER PERTINENT INFORMATION. IT IS NOT THE ENGINEER'S INTENT THAT ANY SINGLE PLAN SHEET IN THIS SET OF DOCUMENTS FULLY DEPICT ALL WORK ASSOCIATED WITH THIS PROJECT.
3. THE ACCESSIBLE ROUTE THROUGH THE PARKING LOT AND ACCESSIBLE PARKING SPACES SHALL HAVE A MAXIMUM 2% CROSS-SLOPE.

NOTE TO CONTRACTOR: PRIOR TO ANY EXCAVATION FOR UNDERGROUND UTILITIES, CONTRACTOR SHALL EXPOSE AND VERIFY LOCATIONS (HORIZONTAL AND VERTICAL) OF ALL EXISTING UTILITIES INCLUDING BUT NOT LIMITED TO GAS, WATER, BROADBAND, PHONE, SANITARY AND STORM SEWERS. ANY CONFLICT SHALL BE REPORTED IMMEDIATELY TO THE ENGINEER AND APPROPRIATE AUTHORITIES

CALL BEFORE YOU DIG!
1-800-DIG-RITE
MARCH 14, 2015
ISSUED TICKET#: 150730244

SCALE IN FEET
0 20 40

P&Z CUP#25.16
OCT. 31, 2016

DANIEL KOZIATEK
2004017198
*HAND SIGNATURE ON FILE

STATE OF MISSOURI — DANIEL ROBERT KOZIATEK — NUMBER PE-2004017198 — 04/11/17 — PROFESSIONAL ENGINEER

SUBMITTAL RECORD

NO	DATE	DESCRIPTION
1	12/20/16	INITIAL IMPROVEMENT PLAN SUBMITTAL TO CITY, DCSD, COTTELVILLE FIRE, AND UTILITIES
2	02/17/17	REISUBMITAL TO CITY OF O'FALLON
3	04/11/17	FINAL SUBMITTAL TO CITY, COTTELVILLE FIRE, AND UTILITIES FOR APPROVAL
4		
5		
6		
7		
8		

Civil & Environmental Consultants, Inc.
CERTIFICATION/LICENSE NO. 2002013942
4848 Park 370 Blvd., Suite F - Hazelwood, MO 63042
314-656-4566 · 866-250-3679
www.cecinc.com

QUICK SERVE PROPERTIES, LLC
7201 OLIVE BLVD.
UNIVERSITY CITY, MO 63130

WICKED GREENZ
4015 HIGHWAY K
OFALLON, MISSOURI 63368
UTILITY PLAN

DATE:	SEPT. 2016
DRAWN BY:	MAK
DWG SCALE:	1" = 20'
CHECKED BY:	DRK
PROJECT NO:	162-880
APPROVED BY:	DRK*

DRAWING NO.: C500

SHEET 07 OF 14

P:\2016\162-880\-CADD\DWG\C001 WICKEDGREENZ\162880-C001 C500.DWG LAST SAVED BY:(MATT.KNUTH) - 4/11/2017 2:44:35 PM, LAST PRINTED BY:(KNUTH, MATT) - 4/11/2017 2:44:43 PM