USPS APPROVED SPECIFICATIONS – CONCRETE PAD (MULTIPLE UNIT)

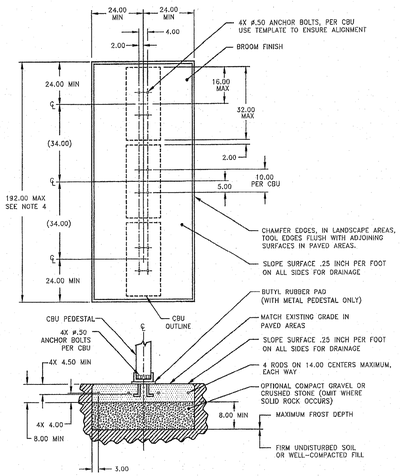

NOTES:

1. CONCRETE SHALL HAVE A COMPRESSIVE STRENGTH OF 3000 PSI @ 28 DAYS, CONTAIN 4% MIN – 6% MAX AIR ENTRAINMENT AND BE PLACED WITH A 3.50 – 4.50 SLUMP IN ACCORDANCE WITH ACI 301.
2. REINFORCING STEEL RODS SHALL CONFORM TO ASTM A615, GRADE 60.
3. ANCHOR BOLTS SHALL CONFORM TO ASTM A193, GRADE B8M, TYPE 316 STAINLESS STEEL.
4. A 3 CBU CONFIGURATION IS DEPICTED. A 2 OR 4 CBU CONFIGURATION MAY BE USED AS LONG AS THEY ARE ARRANGED IN GROUPS SUCH THAT THE OVERALL DIMENSION OF THE CONCRETE BASE DOES NOT EXCEED 192 INCHES.

CLUSTER BOX UNIT (CBU)
-ANCHORING METHODS-

CBU's must be level and mounted firmly in concrete, using one of the following methods.

1. The J-bolt method is the preferred method of installation of CBU's on concrete pads; however, the J-bolt pattern must be accurate with the CBU pedestal plate. When using J-bolts, in order to prevent any damage or accidents that could result from the exposed bolts, consideration should be given as to the time lapse between pouring the concrete and the actual installation. Expansion anchors must be installed in accordance with the manufacturer's instructions.
2. The use of anchor bolts for the installation of CBU's on concrete pads is also acceptable as long as the methods described below are followed.
   a. Hilti Kwik bolt II, 1/2" diameter X 5-1/2" overall length
      Catalog Number: 000-453-696, KB II 12-512
      Stainless Steel Catalog Number: 000-454-744
      Minimum embedment in concrete must be no less than 3-1/2"
   b. ITW Ramset Redhead Trublot, galvanized, 1/2" diameter X 7" overall length
   c. Rawl Stud, 1/2" diameter X 5 1/2" overall length, galvanized.
      Catalog Number: 7324
      Minimum embedment in concrete must be no less than 4"

CLUSTER BOX UNIT (CBU)
-CONCRETE PAD REQUIREMENTS-

- ALL FREE STANDING PADS MUST BE 8" THICK -

1 UNIT	SINGLE PAD	4' X 4'
2 UNITS	DOUBLE PAD	4' X 7'
3 UNITS	TRIPLE PAD	4' X 10'
4 UNITS	QUAD PAD	4' X 13'

*** **WHEN PLACING A PARCEL LOCKER AT ANY CBU LOCATION, INCREASE THE PAD SIZE BY AN ADDITIONAL 4' X 4'*****

POSTAL SERVICE DETAILS FOR MULTI–UNIT CBU PLACEMENT

ENGINEERS SEAL DOES NOT APPLY TO U.S.P.S. DETAILS ON THIS SHEET.

Location		15 YR FLOW	Top of Foundation	Type	Lowest Sill	X-section Location	Flow Line	Slope	Bottom Width	Highwater	Freeboard
Front PC Between Lots #10 & 11	Swale	2.70 cfs	636.60 ft	L/O	636.60 ft	Swale	633.70 ft	4.0%	4.00 ft	633.92 ft	2.68 ft
Middle PC Between Lots #10 & 11	Swale	2.70 cfs	636.60 ft	L/O	636.60 ft	Swale	629.85 ft	7.5%	4.00 ft	630.03 ft	6.57 ft
Back PC Between Lots #10 & 11	Swale	2.70 cfs	637.00 ft	W/O	628.30 ft	Swale	625.08 ft	7.5%	4.00 ft	625.23 ft	3.07 ft

EMERGENCY RELIEF SWALE CALCULATIONS
NOT TO SCALE

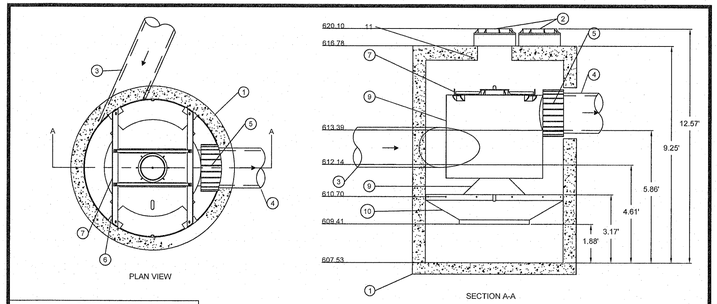

PARTS LIST

ITEM	DESCRIPTION	SIZE
1	PRECAST MANHOLE (BY HYDRO)	72"
2	MANHOLE LID, FRAME AND COVER	24"
3	INLET PIPE (BY ADS/OTHERS)	15"
4	OUTLET PIPE (BY ADS/OTHERS)	15"
5	PIPE COUPLING (BY ADS/OTHERS)	
6	LEDGER ANGLE	
7	SUPPORT FRAME	
8	DIP PLATE	
9	CENTER SHAFT & CONE	
10	BENCHING SKIRT	
11	MATERIALS & LABOR TO ACHIEVE FINAL GRADE (BY OTHERS)	

EQUIPMENT PERFORMANCE
THE STORMWATER TREATMENT UNIT SHALL ADHERE TO THE HYDRAULIC PARAMETERS GIVEN IN THE CHART BELOW AND PROVIDE THE REMOVAL EFFICIENCIES AND STORAGE CAPACITIES AS FOLLOWS:

1. THE TREATMENT SYSTEM SHALL USE AN INDUCED VORTEX TO SEPARATE POLLUTANTS.
2. PEAK HYDRAULIC CAPACITY: 8.0 CFS (227 L/S)
3. SEDIMENT STORAGE CAPACITY: 2.10 YD³ (1.59 m³)
4. CONTINUOUS OIL STORAGE CAPACITY: 216 GALLONS (818 LITERS)
5. SEDIMENT SHALL BE STORED IN A ZONE THAT IS ISOLATED FROM THE MAIN FLOW PATH AND PROTECTED FROM REINTRAINMENT BY A BENCHING SKIRT.

Hydro International stormwater

THE DOWNSTREAM DEFENDER ® AND FIRST DEFENSE ® ARE DESIGNED, MANUFACTURED AND SUPPLIED BY HYDRO INTERNATIONAL PLC. AND ALL TRADEMARKS ARE THE PROPERTY OF HYDRO INTERNATIONAL PLC.

APPROVED BY:
SIGNED DATE

THIS DRAWING HAS BEEN PREPARED BASED ON INFORMATION PROVIDED TO ADS UNDER THE DIRECTION OF THE DESIGN ENGINEER OR OTHER PROJECT REPRESENTATIVE. THE DESIGN ENGINEER SHALL REVIEW THIS DRAWING PRIOR TO CONSTRUCTION. IT IS THE ULTIMATE RESPONSIBILITY OF THE DESIGN ENGINEER TO ENSURE THAT THE PRODUCT(S) SPECIFIED AND ALL ASSOCIATED DETAILS MEET ALL APPLICABLE LAWS, REGULATIONS, AND PROJECT REQUIREMENTS.

ADS ADVANCED DRAINAGE SYSTEMS, INC.
TECHNICAL SERVICES
70 INWOOD ROAD, SUITE 3
ROCKY HILL, CT 06067
V: 888-892-2694
F: 866-328-8401

6' OFFLINE DD - DETAILS

DATE:	PROJECT:
DRAWN:	SCALE:
CHECKED:	PAGE: 2 OF 3

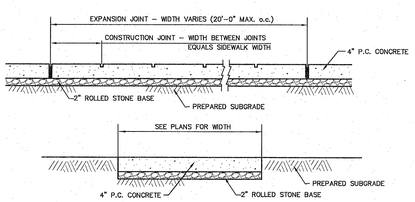

* ALL GRANULAR ROLLED STONE BASE UNDER PROPOSED CONCRETE MUST BE COMPACTED TO 100% OF THE MAXIMUM DENSITY AS DETERMINED BY THE STANDARD PROCTOR TEST AASHTO T-99. CONCRETE COMPRESSIVE STRENGTH SHALL BE 4000 PSI IN 28 DAYS.

CONCRETE SIDEWALK DETAIL
NOT TO SCALE

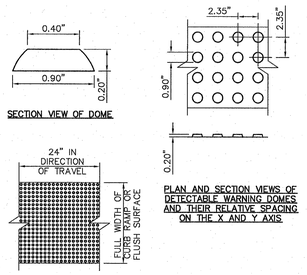

PLAN VIEW OF A DETECTABLE WARNING SURFACE SHOWING DOMES ALIGNED IN ROWS, NOT SKEWED DIAGONALLY.

TYPICAL DETAIL OF DETECTABLE WARNING SURFACE
NOT TO SCALE

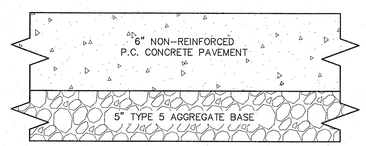

MAIL KIOSK PARKING AREA CONCRETE PAVEMENT DETAIL
NOT TO SCALE
NOTE:
ALL NON-REINFORCED CONCRETE SHALL BE 4,000 P.S.I. AT 28 DAYS.

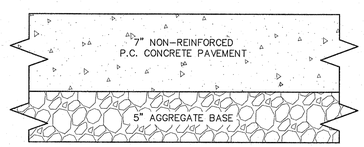

ENTRANCE APRON FOR WYNDGATE RIDGE DRIVE CONCRETE PAVEMENT DETAIL
NOT TO SCALE
NOTE:
ALL NON-REINFORCED CONCRETE SHALL BE 4,000 P.S.I. AT 28 DAYS.

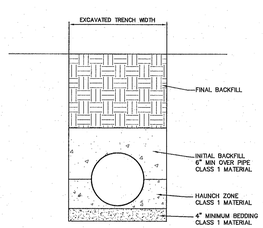

1. The use of High Density Polyethylene Corrugated pipe A.D.S. N12 or Equal will be permitted as an acceptable alternative to reinforced concrete pipe. Pipe shall meet A.S.T.M. D-2321 and AASHTO M-294-921. Concrete flared end sections and inlet structures shall be required. Pipe must have smooth interior wall and is not to be used inside the Public Right-of-Way.

All concrete pipe or HDPE pipe shall be installed with o-ring rubber type gaskets per M.S.D. Standard Construction Specifications or Manufacturer.

2. In typical conditions the minimum trench width is determined by the size of the pipe and the ability to get compaction equipment between the pipe and the trench walls. The minimum trench width should not be less than the outside diameter plus 16 inches or the pipe outside diameter times 1.25 plus 12 inches; whichever is greater. High speed trenchers may enable satisfactory installation of pipe in narrower trenches. Poor insitu soil conditions such as peat, muck, running sands, or expansive clays will require substantially wider backfill as well as deeper foundation and bedding. Trench width and foundation depth should be based on a thorough site investigation.

3. Backfill in the area up to the springline should be carefully placed and compacted to achieve a minimum E value of 1,000 psi as detailed in ASTM D2321. A minimum of 12" of backfill should be placed and compacted above the crown of the pipe. It is typical for trenches to be backfilled entirely with Type I or Type II materials when under pavement.

4. Flexible pipe should never be installed in a concrete cradle, as done for rigid pipe in a Class A installation. This type of installation could create concentrated forces at the ends of the cradle when the pipe has deformed.

H.D.P.E. PIPE DETAIL

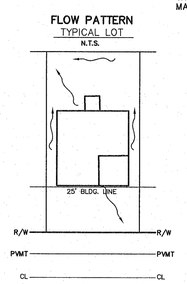

FLOW PATTERN
TYPICAL LOT
N.T.S.

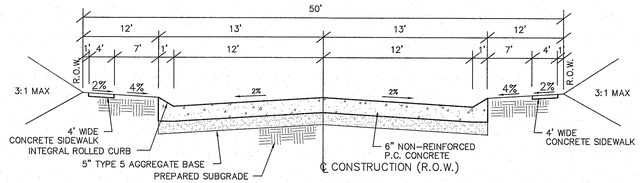

*SIDEWALK LOCATION MAY VARY. SEE PLANS.

TYPICAL SECTION
NOT TO SCALE
(26' WIDE P.C. CONCRETE PAVEMENT)
5" TYPE 5 AGGREGATE BASE

NOTE:
ALL NON-REINFORCED CONCRETE SHALL BE 4,000 P.S.I. AT 28 DAYS.

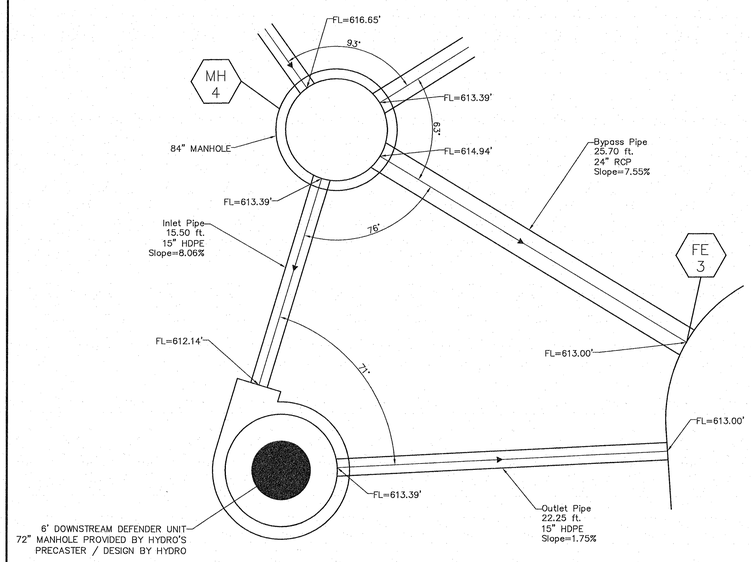

ALL PIPE LENGTHS AND SLOPES ARE DIMENSIONED FROM INSIDE STRUCTURE WALL TO INSIDE STRUCTURE WALL FOR THE INLET, OUTLET AND BYPASS PIPES IN THESE DETAILS.

The bypass line is set 1.55' above the inlet pipe to the Downstream Defender to allow flows greater than 4.25 cfs to bypass the unit.

ALL PIPE CONNECTIONS THOUGH THE STRUCTURE WALLS WILL UTILIZE AN A-LOK TYPE GASKET WHERE APPLICABLE. OTHER CONNECTIONS MUST USE PVC WATERSTOP.

DOWNSTREAM DEFENDER
NOT TO SCALE

PROJECT TITLE:
WYNDGATE MEADOWS
Box Project # 17-17314 | Issue Date: 07/09/2019

ENGINEERING PLANNING SURVEYING
221 Point West Blvd.
St. Charles, MO 63301
636-928-5552
FAX 928-1718

DISCLAIMER OF RESPONSIBILITY
I hereby specify that the documents intended to be authenticated by my seal are limited to this sheet, and I hereby disclaim any responsibility for all other Drawings, Specifications, Estimates, Reports or other documents or instruments relating to or intended to be used for any part or parts of the architectural or engineering project or survey.

STATE OF MISSOURI JEFFREY B SIMMONS NUMBER 2007030831 PROFESSIONAL ENGINEER
11/22/19

JEFFREY B. SIMMONS
CIVIL ENGINEER
2007030831

Copyright 2019
Box Engineering Company, Inc.
Authority No. 000655
All Rights Reserved

REVISIONS

08/08/19	D.C.S.D. P.W.S.D. #2 & CLIENT COMMENTS
08/30/19	D.C.S.D. P.W.S.D. #2 & CITY COMMENTS
09/25/19	D.C.S.D & CITY COMMENTS
10/22/19	CITY COMMENTS
11/08/19	CITY COMMENTS
11/22/19	CITY COMMENTS

Developer / Owner:
STRAQR, L.L.C.
9645 Clayton Road
St. Louis, MO 63124
314-667-9400

CONSTRUCTION DETAILS

P+Z No. #18-012166
Approval Date: 06/27/2019
City No. #RSP-19-000010