2003 ~~NEWEST~~

See Detention Report Dated 10/12/09

STORMWATER MANAGEMENT / DETENTION BASIN REPORT

for

PROGRESS POINT PHASE II

Project Location:

City of O'Fallon
St. Charles County, Missouri

Prepared by:
Stock & Associates
Consulting Engineers
425 North New Ballas Road, Suite 165
St. Louis, MO 63122

Stock Project No. 200-2180.20

Date: June 3, 2003
Revised: September 18, 2003
Revised: October 20, 2003

George M. Stock, P.E. 25116

File Copy
OK RG
11/4/03

TABLE OF CONTENTS

I. **EXECUTIVE SUMMARY**

II. **RUNOFF CALCULATIONS - EXISTING CONDITIONS**

1. Network Schematic
2. Watershed Runoff Summaries - 2, 15, 25, 100 yr Storms
3. Time of Concentration
4. Curve Number Determination
5. Developed Composite Hydrographs - 15, 25, 100 yr Storms

III. **RUNOFF and STORAGE CALCULATIONS - DEVELOPED CONDITIONS**

1. Network Schematic
2. Watershed Runoff Summaries - 2, 15, 25, 100 yr Storms
3. Time of Concentration
4. Curve Number Determination
5. Developed Composite Hydrographs - 2, 15, 25, 100 yr Storms
6. Basin 2 Volume Table
7. Outlet Control Structure - Data and Rating Curves
8. Basin 2 Stage-Storage-Discharge Table and Routing of 15, 25, 100 yr Storms

IV. **APPENDIX**

A. Location Map
B. Soil Survey Map and Soil Information
C. Soil Name and Hydrologic Information
D. Design Storms for Northeastern Missouri from ISWS Bulletin 71
E. SCS Unit Hydrograph Equations

V. **DRAWINGS**

C00 - PREDEVELOPED DRAINAGE AREA PLAN
C7.3 - OUTLET STRUCTURE DETAILS
C8.1 - DEVELOPED DRAINAGE AREA PLAN FOR BASIN 2

I EXECUTIVE SUMMARY

EXECUTIVE SUMMARY

Introduction

This report was prepared by Stock & Associates, for Progress Point Phase II, a proposed development occupying approximately 64 acres of a total developable area of approximately 156 acres. The development is located within the City of O'Fallon, St. Charles County, Missouri, and is zoned HTCD. The area is currently undeveloped and is bounded by US Highway 40/61 to the south, MO Highway K to the west, and Weldon Spring Road to the north and east. The overall site is divided into two (2) major watersheds. Phase II consists of developing the western watershed and providing a single stormwater detention basin to regulate runoff.

Existing Site Description

The overall site is divided into two watersheds with slightly more than half the site sloping northwest towards Crooked Creek, and the remainder of the site sloping northeast towards Weldon Spring Road and Persimmon Woods Golf Course. A portion of the area tributary to Crooked Creek is the subject of this scope report.

The site is largely agricultural consisting of small grain. Woods cover a fair portion of the ground and border the fields and line the draws and creek banks. The site is gently rolling and generally falls from south to north. Runoff from this watershed drains directly into Crooked Creek.

Soil Characteristics

A soil survey map included in this report indicates the soils present on-site. The soil description is included in the appendix. Although there are some areas of soils in Hydrologic Group D, the soils are predominately within Hydrologic Group C. The on-site soils and their hydrologic groups are as follows:

Soil	Hydrologic Group
11, Dockery	C
24D2, Keswick	D
27C, Armster	C
48B, 48C, Weller	C

Proposed Improvements

The proposed development for Phase II of Progress Point includes office, retail, and food services. Infrastructure construction will comprise roads, utilities, and stormwater management facilities within the site.

In order to model runoff from the post-development condition, it is necessary to know the amount of impervious cover. Since the exact proportions of pavement, roofs, and vegetated areas are not known at this time, we assumed 90% impervious cover in the developed condition as stipulated by the City of O'Fallon. In the future, as final build-out becomes imminent, the proportion of impervious coverage will need to be accurately determined and the design solutions validated or adjusted as required.

Hydrologic Methodology and Results

Hydrologic calculations for this report were done using Haestad Methods QTR55 computer modeling software. Runoff rates were calculated for both the existing and proposed conditions for the 2, 15, 25, and 100 year storms. Haestad Methods PondPack v8 was used to hydraulically model the post-development conditions and route runoff from the various storms through the proposed detention basin and outlet control structure.

Three areas of the project will not drain to the detention basin, and runoff from these three areas will be released undetained. These comprise a 10 acre sub-area to the west of Crooked Creek, a small sub-area of about six acres to the east of Crooked Creek adjacent to Highway 40, and a small sub-area of about two acres at the north corner of the site by Weldon Spring Road. Runoff from these three sub-areas is accounted for in the calculations by comparing the composite post-development hydrograph with the composite pre-development hydrograph. In this way, adequate volume is provided in the detention basin to attenuate the increase in runoff regardless of whether a given sub-area drains to the detention basin or not.

A single concrete outlet control structure will serve as the principal spillway. The outlet control structure and outfall piping will convey all design flows to Crooked Creek. Even though an embankment spillway is not required in order to handle design flows, an emergency overflow spillway will be cut in the embankment. The crest elevation of the emergency overflow spillway will be set higher than the highest design water surface elevation.

According to the City of O'Fallon's Land Development Regulations, Section 405.24, all new developments shall provide a storm water system that insures that the rate of flow of storm water runoff discharged from the site after development, does not exceed the rate of flow of storm water runoff discharged from the site before development, for a twenty-five (25) year storm. In compliance with stipulated requirements, we have included calculations for the 15, 25, and 100 year storms, and for the 2 year storm at the direction of the City of O'Fallon.

The following tables illustrate compliance with these regulations.

The hydraulic analysis we performed to route the 100 year storm through the detention basin show that approximately #.# ft of freeboard is provided from water surface elevation to the top of the embankment for the 100-year storm.

TABLE 1

Peak Discharge - Pre-Development Condition for the 15, 25, and 100 Year Storms	
Year	***Runoff (c.f.s.)***
2	109
15	203
25	247
100	359

TABLE 2

Peak Discharge - Post-Development Condition for the 15, 25, and 100 Year Storms	
Year	*Runoff (c.f.s.)*
2	120
15	182
25	210
100	369

2 AC
10 AC
6.5 AC
18.5 BYPASS X (4.75 - 2.31) = 45 CFS

133 OUTFLOW FROM BASIN SHEET 9.08

178 FROM SITE

PRE DEVELOPMENT.
60 ACRES X 2.31 = 138.6
18 ACRES X 2.31 = 41.58

180 CFS ± MAX RELEASE FROM SITE

178 < 180
OK
10/29/03

II RUNOFF CALCULATIONS - EXISTING CONDITIONS

1. Network Schematic
9. Watershed Runoff Summaries - 15, 25, 100 yr Storms
10. Time of Concentration
11. Curve Number Determination
12. Developed Composite Hydrographs - 15, 25, 100 yr Storms

Job File: C:\Haestad\PPKW\Job Files\ProgressPoint-PhaseII_200-2180-20\1_PROGRESSPOINT-PH2_I-PLANS_PRE_V8.PPW
Rain Dir: C:\Haestad\PPKW\Job Files\ProgressPoint-PhaseII_200-2180-20\

==========

Progress Point Phase II - Pre-Developed Condition

Project No 200-2180.20

Runoff Generated from Existing Conditions

TABLE OF CONTENTS

********** NETWORK SCHEMATIC **********

Watershed..... ..... Network Schematic 0.01

********** MASTER SUMMARY **********

Watershed..... Master Network Summary 1.01

********** DESIGN STORMS SUMMARY **********

STL-SCS..... Design Storms 2.01

********** TC CALCULATIONS **********

1_PRE-WEST..... Tc Calcs 3.01

2_PRE-EAST..... Tc Calcs 3.03

3_PRE-NORTH..... Tc Calcs 3.05

********** CN CALCULATIONS **********

1_PRE-WEST..... Runoff CN-Area 4.01

2_PRE-EAST..... Runoff CN-Area 4.02

3_PRE-NORTH..... Runoff CN-Area 4.03

********** RUNOFF HYDROGRAPHS **********

Unit Hyd. Equations 5.01

S/N:
PondPack Ver: Compute Time: Date:

Table of Contents (continued)

********** HYG ADDITION **********

OUTFALL..... 002
Node: Addition Summary 6.01

OUTFALL..... 015
Node: Addition Summary 6.04

OUTFALL..... 025
Node: Addition Summary 6.07

OUTFALL..... 100
Node: Addition Summary 6.10

S/N:
PondPack Ver: Compute Time: Date:

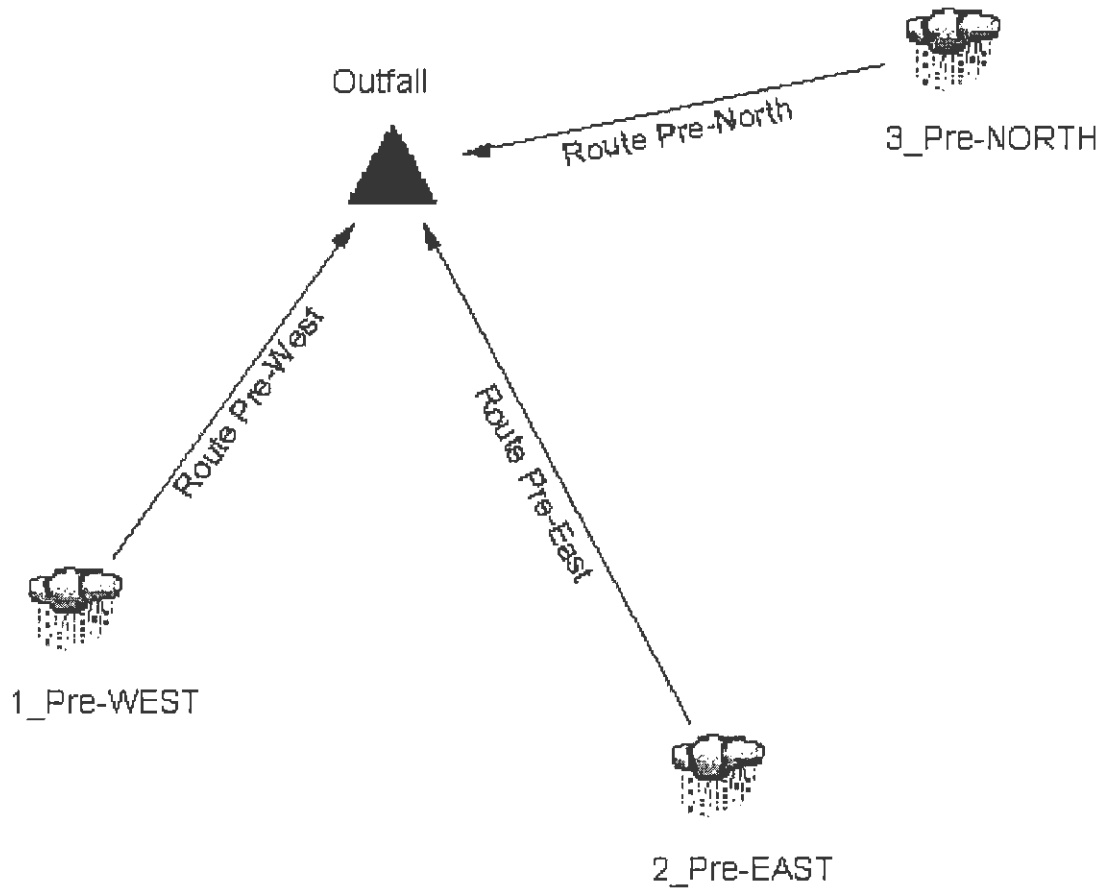

Progress Point - Phase II
Pre-Developed Condition
Network Schematic

MASTER DESIGN STORM SUMMARY

Network Storm Collection: STL-SCS

Return Event	Total Depth in	Rainfall Type	RNF ID
002	3.5000	Synthetic Curve	TypeII 24hr
015	4.9600	Synthetic Curve	TypeII 24hr
025	5.6000	Synthetic Curve	TypeII 24hr
100	7.2100	Synthetic Curve	TypeII 24hr

MASTER NETWORK SUMMARY
SCS Unit Hydrograph Method

(*Node=Outfall; +Node=Diversion;)
(Trun= HYG Truncation: Blank=None; L=Left; R=Rt; LR=Left&Rt)

Node ID	Type	Return Event	HYG Vol ac-ft	Trun	Qpeak hrs	Qpeak cfs	Max W5EL ft	Max Pond Storage ac-ft
1_PRE-WEST	AREA	2	1.033		12.0000	17.22		
1_PRE-WEST	AREA	15	1.943		12.0000	32.58		
1_PRE-WEST	AREA	25	2.376		11.9500	39.83		
1_PRE-WEST	AREA	100	3.521		11.9500	59.16		
2_PRE-EAST	AREA	2	7.860		12.1000	96.19		
2_PRE-EAST	AREA	15	14.228		12.1000	177.25		
2_PRE-EAST	AREA	25	17.211		12.1000	214.57		
2_PRE-EAST	AREA	100	25.028		12.1000	310.71		
3_PRE-NORTH	AREA	2	.250		11.9500	4.51		
3_PRE-NORTH	AREA	15	.446		11.9000	8.08		
3_PRE-NORTH	AREA	25	.538		11.9000	9.76		
3_PRE-NORTH	AREA	100	.778		11.9000	14.08		
*OUTFALL	JCT	2	9.142		12.0500	108.85		
*OUTFALL	JCT	15	16.618		12.0500	203.18		
*OUTFALL	JCT	25	20.124		12.0500	246.78		
*OUTFALL	JCT	100	29.327		12.0500	359.42		

File.... C:\Haestad\PPKW\Job Files\ProgressPoint-PhaseII_200-2180-20\
Title... Progress Point Phase II - Pre-Developed Condition
Project No 2180

Runoff Generated from Existing Conditions

DESIGN STORMS SUMMARY

Design Storm File,ID = STL-SCS

Storm Tag Name = 002

Data Type, File, ID = Synthetic Storm TypeII 24hr
Storm Frequency = 2 yr
Total Rainfall Depth= 3.5000 in
Duration Multiplier = 1
Resulting Duration = 24.0000 hrs
Resulting Start Time= .0000 hrs Step= .1000 hrs End= 24.0000 hrs

Storm Tag Name = 015

Data Type, File, ID = Synthetic Storm TypeII 24hr
Storm Frequency = 15 yr
Total Rainfall Depth= 4.9600 in
Duration Multiplier = 1
Resulting Duration = 24.0000 hrs
Resulting Start Time= .0000 hrs Step= .1000 hrs End= 24.0000 hrs

Storm Tag Name = 025

Data Type, File, ID = Synthetic Storm TypeII 24hr
Storm Frequency = 25 yr
Total Rainfall Depth= 5.6000 in
Duration Multiplier = 1
Resulting Duration = 24.0000 hrs
Resulting Start Time= .0000 hrs Step= .1000 hrs End= 24.0000 hrs

Storm Tag Name = 100

Data Type, File, ID = Synthetic Storm TypeII 24hr
Storm Frequency = 100 yr
Total Rainfall Depth= 7.2100 in
Duration Multiplier = 1
Resulting Duration = 24.0000 hrs
Resulting Start Time= .0000 hrs Step= .1000 hrs End= 24.0000 hrs

::
TIME OF CONCENTRATION CALCULATOR
::

Segment #1: Tc: TR-55 Sheet

Mannings n	.0350
Hydraulic Length	300.00 ft
2yr, 24hr P	3.1000 in
Slope	.023100 ft/ft
Avg.Velocity	.71 ft/sec

Segment #1 Time: .1177 hrs

Segment #2: Tc: TR-55 Shallow

Hydraulic Length	210.00 ft
Slope	.023100 ft/ft
Unpaved	
Avg.Velocity	2.45 ft/sec

Segment #2 Time: .0238 hrs

==========
Total Tc: .1415 hrs
==========

Tc Equations used...

==== SCS TR-55 Sheet Flow ==========

Tc = (.007 * ((n * Lf)**0.8)) / ((P**.5) * (Sf**.4))

Where: Tc = Time of concentration, hrs
n = Mannings n
Lf = Flow length, ft
P = 2yr, 24hr Rain depth, inches
Sf = Slope, %

==== SCS TR-55 Shallow Concentrated Flow ==========

Unpaved surface:
V = 16.1345 * (Sf**0.5)

Paved surface:
V = 20.3282 * (Sf**0.5)

Tc = (Lf / V) / (3600sec/hr)

Where: V = Velocity, ft/sec
Sf = Slope, ft/ft
Tc = Time of concentration, hrs
Lf = Flow length, ft

TIME OF CONCENTRATION CALCULATOR

Segment #1: Tc: TR-55 Sheet

Mannings n	.0350
Hydraulic Length	300.00 ft
2yr, 24hr P	3.1000 in
Slope	.016667 ft/ft
Avg.Velocity	.62 ft/sec

Segment #1 Time: .1342 hrs

Segment #2: Tc: TR-55 Shallow

Hydraulic Length	330.00 ft
Slope	.048500 ft/ft
Unpaved	
Avg.Velocity	3.55 ft/sec

Segment #2 Time: .0258 hrs

Segment #3: Tc: TR-55 Shallow

Hydraulic Length	910.00 ft
Slope	.026400 ft/ft
Unpaved	
Avg.Velocity	2.62 ft/sec

Segment #3 Time: .0964 hrs

Segment #4: Tc: TR-55 Shallow

Hydraulic Length	730.00 ft
Slope	.019200 ft/ft
Unpaved	
Avg.Velocity	2.24 ft/sec

Segment #4 Time: .0907 hrs

Total Tc: .3471 hrs

Tc Equations used...

==== SCS TR-55 Sheet Flow ==

Tc = (.007 * ((n * Lf)**0.8)) / ((P**.5) * (Sf**.4))

Where: Tc = Time of concentration, hrs
n = Mannings n
Lf = Flow length, ft
P = 2yr, 24hr Rain depth, inches
Sf = Slope, %

==== SCS TR-55 Shallow Concentrated Flow ================================

Unpaved surface:
V = 16.1345 * (Sf**0.5)

Paved surface:
V = 20.3282 * (Sf**0.5)

Tc = (Lf / V) / (3600sec/hr)

Where: V = Velocity, ft/sec
Sf = Slope, ft/ft
Tc = Time of concentration, hrs
Lf = Flow length, ft

::

TIME OF CONCENTRATION CALCULATOR

::

Segment #1: Tc: User Defined

Segment #1 Time: .0833 hrs

==========

Total Tc: .0833 hrs

==========

S/N: 4216015070C1 Stock & Associates
PondPack Ver: Compute Time: Date:

File.... C:\Haestad\PPKW\Job Files\ProgressPoint-PhaseII_200-2180-20\1_PROGRESSPOINT-PH2_I-PLANS_PRE_V8.PPW

Tc Equations used...

==== User Defined ==========

Tc = Value entered by user

Where: Tc = Time of concentration

File.... C:\Haestad\PPKW\Job Files\ProgressPoint-PhaseII_200-2180-20\1_PROGRESSPOINT-PH2_I-PLANS_PRE_V8.PPW

RUNOFF CURVE NUMBER DATA

Soil/Surface Description	CN	Area acres	Impervious Adjustment %C	Impervious Adjustment %UC	Adjusted CN
Woods - Good	70	6.000			70.00
Cultivated - Sm Grain - SR+CR	80	4.000			80.00
COMPOSITE AREA & WEIGHTED CN --->		10.000			74.00 (74)

S/N: 4216015070C1 Stock & Associates
PondPack Ver: Compute Time: Date:

File.... C:\Haestad\PPKW\Job Files\ProgressPoint-PhaseII_200-2180-20\1_PROGRESSPOINT-PH2_I-PLANS_PRE_V8.PPW

RUNOFF CURVE NUMBER DATA

Soil/Surface Description	CN	Area acres	Impervious Adjustment %C	Impervious Adjustment %UC	Adjusted CN
Woods - Good	70	26.000			70.00
Cultivated - Sm Grain - SR + CR	80	35.000			80.00
Paved; open ditches (w/right-of-way	92	5.000			92.00
COMPOSITE AREA & WEIGHTED CN --->		66.000			76.97 (77)

File.... C:\Haestad\PPKW\Job Files\ProgressPoint-PhaseII_200-2180-20\1_PROGRESSPOINT-PH2_I-PLANS_PRE_V8.PPW

RUNOFF CURVE NUMBER DATA

Soil/Surface Description	CN	Area acres	Impervious Adjustment %C	Impervious Adjustment %UC	Adjusted CN
Woods, good	70	.500			70.00
SR + Crop residue, good	80	1.500			80.00
COMPOSITE AREA & WEIGHTED CN --->		2.000			77.50 (78)

SCS UNIT HYDROGRAPH METHOD
(Computational Notes)

DEFINITION OF TERMS: ----------

At = Total area (acres): At = Ai+Ap
Ai = Impervious area (acres)
Ap = Pervious area (acres)
CNi = Runoff curve number for impervious area
CNp = Runoff curve number for pervious area
fLoss = f loss constant infiltration (depth/time)
gKs = Saturated Hydraulic Conductivity (depth/time)
Md = Volumetric Moisture Deficit
Psi = Capillary Suction (length)
hK = Horton Infiltration Decay Rate (time^-1)
fo = Initial Infiltration Rate (depth/time)
fc = Ultimate(capacity)Infiltration Rate (depth/time)
Ia = Initial Abstraction (length)
dt = Computational increment (duration of unit excess rainfall)
Default dt is smallest value of 0.1333Tc, rtm, and th
(Smallest dt is then adjusted to match up with Tp)
UDdt = User specified override computational main time increment
(only used if UDdt is => .1333Tc)
D(t) = Point on distribution curve (fraction of P) for time step t

K = 2 / (1 + (Tr/Tp)): default K = 0.75: (for Tr/Tp = 1.67)
Ks = Hydrograph shape factor
= Unit Conversions * K:
= ((1hr/3600sec) * (1ft/12in) * ((5280ft)**2/sq.mi)) * K
Default Ks = 645.333 * 0.75 = 484

Lag = Lag time from center of excess runoff (dt) to Tp: Lag = 0.6Tc
P = Total precipitation depth, inches
Pa(t) = Accumulated rainfall at time step t
Pi(t) = Incremental rainfall at time step t
qp = Peak discharge (cfs) for 1in. runoff, for 1hr, for 1 sq.mi.
= (Ks * A * Q) / Tp (where Q = 1in. runoff, A=sq.mi.)
Qu(t) = Unit hydrograph ordinate (cfs) at time step t
Q(t) = Final hydrograph ordinate (cfs) at time step t
Rai(t)= Accumulated runoff (inches) at time step t for impervious area
Rap(t)= Accumulated runoff (inches) at time step t for pervious area
Rii(t)= Incremental runoff (inches) at time step t for impervious area
Rip(t)= Incremental runoff (inches) at time step t for pervious area
R(t) = Incremental weighted total runoff (inches)
Rtm = Time increment for rainfall table
Si = S for impervious area: Si = (1000/CNi) - 10
Sp = S for pervious area: Sp = (1000/CNp) - 10
t = Time step (row) number
Tc = Time of concentration
Tb = Time (hrs) of entire unit hydrograph: Tb = Tp + Tr
Tp = Time (hrs) to peak of a unit hydrograph: Tp = (dt/2) + Lag
Tr = Time (hrs) of receding limb of unit hydrograph: Tr = ratio of Tp

SCS UNIT HYDROGRAPH METHOD
(Computational Notes)

PRECIPITATION: ----------
Column (1): Time for time step t
Column (2): D(t) = Point on distribution curve for time step t
Column (3): Pi(t) = Pa(t) - Pa(t-1): Col.(4) - Preceding Col.(4)
Column (4): Pa(t) = D(t) x P: Col.(2) x P

PERVIOUS AREA RUNOFF (using SCS Runoff CN Method) ----------
Column (5): Rap(t) = Accumulated pervious runoff for time step t
If (Pa(t) is <= 0.2Sp) then use: Rap(t) = 0.0
If (Pa(t) is > 0.2Sp) then use:

Rap(t) = (Col.(4)-0.2Sp)**2 / (Col.(4)+0.8Sp)

Column (6): Rip(t) = Incremental pervious runoff for time step t
Rip(t) = Rap(t) - Rap(t-1)
Rip(t) = Col.(5) for current row - Col.(5) for preceding row.

IMPERVIOUS AREA RUNOFF ----------
Column (7 & 8)... Did not specify to use impervious areas.

INCREMENTAL WEIGHTED RUNOFF: ----------
Column (9): R(t) = (Ap/At) x Rip(t) + (Ai/At) x Rii(t)
R(t) = (Ap/At) x Col.(6) + (Ai/At) x Col.(8)

SCS UNIT HYDROGRAPH METHOD: ----------
Column (10): Q(t) is computed with the SCS unit hydrograph method
using R() and Qu().

SUMMARY FOR HYDROGRAPH ADDITION
at Node: **OUTFALL**

HYG Directory: C:\Haestad\PPKW\Job Files\ProgressPoint-PhaseII_200-2180-20\

Upstream Link ID	Upstream Node ID	HYG file	HYG ID	HYG tag
ROUTE PRE-WEST	1_PRE-WEST		1_PRE-WEST	002
ROUTE PRE-EAST	2_PRE-EAST		2_PRE-EAST	002
ROUTE PRE-NORTH	3_PRE-NORTH		3_PRE-NORTH	002

INFLOWS TO: OUTFALL

HYG file	HYG ID	HYG tag	Volume ac-ft	Peak Time hrs	Peak Flow cfs
	1_PRE-WEST	002	1.033	12.0000	17.22
	2_PRE-EAST	002	7.860	12.1000	96.19
	3_PRE-NORTH	002	.250	11.9500	4.51

TOTAL FLOW INTO: OUTFALL

HYG file	HYG ID	HYG tag	Volume ac-ft	Peak Time hrs	Peak Flow cfs
	OUTFALL	002	9.142	12.0500	108.85

TOTAL NODE INFLOW...
HYG file =
HYG ID = OUTFALL
HYG Tag = 002

Peak Discharge =	108.85 cfs
Time to Peak =	12.0500 hrs
HYG Volume =	9.142 ac-ft

HYDROGRAPH ORDINATES (cfs)
Output Time increment = .0500 hrs
Time on left represents time for first value in each row.

Time hrs					
9.5500	.00	.00	.00	.00	.00
9.8000	.01	.01	.02	.03	.05
10.0500	.08	.11	.15	.19	.24
10.3000	.29	.34	.40	.46	.53
10.5500	.60	.68	.77	.87	.98
10.8000	1.10	1.22	1.36	1.50	1.65
11.0500	1.82	2.00	2.20	2.43	2.69
11.3000	2.99	3.32	3.68	4.07	4.52
11.5500	5.26	6.55	8.80	12.52	18.26
11.8000	26.61	39.68	59.11	80.10	98.29
12.0500	108.85	108.06	100.03	87.53	73.46
12.3000	60.40	49.83	41.93	36.02	31.32
12.5500	27.52	24.40	21.86	19.80	18.16
12.8000	16.84	15.78	14.89	14.12	13.45
13.0500	12.87	12.36	11.93	11.54	11.19
13.3000	10.87	10.57	10.29	10.03	9.78
13.5500	9.53	9.30	9.07	8.85	8.65
13.8000	8.45	8.26	8.07	7.89	7.71
14.0500	7.54	7.38	7.23	7.09	6.98
14.3000	6.88	6.79	6.71	6.63	6.57
14.5500	6.50	6.44	6.37	6.31	6.25
14.8000	6.19	6.13	6.07	6.01	5.95
15.0500	5.89	5.83	5.77	5.71	5.65
15.3000	5.59	5.53	5.47	5.41	5.35
15.5500	5.28	5.22	5.16	5.10	5.03
15.8000	4.97	4.91	4.84	4.78	4.72
16.0500	4.66	4.60	4.54	4.49	4.45
16.3000	4.42	4.38	4.35	4.33	4.30
16.5500	4.28	4.25	4.23	4.21	4.19
16.8000	4.17	4.14	4.12	4.10	4.08
17.0500	4.06	4.03	4.01	3.99	3.97
17.3000	3.95	3.92	3.90	3.88	3.86
17.5500	3.84	3.81	3.79	3.77	3.75

HYDROGRAPH ORDINATES (cfs)
Output Time increment = .0500 hrs
Time on left represents time for first value in each row.

Time hrs					
17.8000	3.72	3.70	3.68	3.66	3.63
18.0500	3.61	3.59	3.56	3.54	3.52
18.3000	3.50	3.47	3.45	3.43	3.40
18.5500	3.38	3.36	3.33	3.31	3.29
18.8000	3.27	3.24	3.22	3.20	3.17
19.0500	3.15	3.13	3.10	3.08	3.06
19.3000	3.03	3.01	2.98	2.96	2.94
19.5500	2.91	2.89	2.87	2.84	2.82
19.8000	2.79	2.77	2.75	2.72	2.70
20.0500	2.68	2.66	2.64	2.62	2.60
20.3000	2.59	2.58	2.58	2.57	2.56
20.5500	2.56	2.55	2.55	2.54	2.54
20.8000	2.53	2.53	2.53	2.52	2.52
21.0500	2.51	2.51	2.50	2.50	2.50
21.3000	2.49	2.49	2.48	2.48	2.47
21.5500	2.47	2.47	2.46	2.46	2.45
21.8000	2.45	2.44	2.44	2.44	2.43
22.0500	2.43	2.42	2.42	2.41	2.41
22.3000	2.40	2.40	2.40	2.39	2.39
22.5500	2.38	2.38	2.37	2.37	2.36
22.8000	2.36	2.36	2.35	2.35	2.34
23.0500	2.34	2.33	2.33	2.32	2.32
23.3000	2.32	2.31	2.31	2.30	2.30
23.5500	2.29	2.29	2.28	2.28	2.28
23.8000	2.27	2.27	2.26	2.26	2.25
24.0500	2.14	1.90	1.60	1.27	.96
24.3000	.68	.48	.33	.23	.16
24.5500	.11	.08	.06	.04	.03
24.8000	.02	.01	.01	.00	.00
25.0500	.00				

SUMMARY FOR HYDROGRAPH ADDITION
at Node: **OUTFALL**

HYG Directory: C:\Haestad\PPKW\Job Files\ProgressPoint-PhaseII_200-2180-20\

Upstream Link ID	Upstream Node ID	HYG file	HYG ID	HYG tag
ROUTE PRE-WEST	1_PRE-WEST		1_PRE-WEST	015
ROUTE PRE-EAST	2_PRE-EAST		2_PRE-EAST	015
ROUTE PRE-NORTH	3_PRE-NORTH		3_PRE-NORTH	015

INFLOWS TO: OUTFALL

HYG file	HYG ID	HYG tag	Volume ac-ft	Peak Time hrs	Peak Flow cfs
	1_PRE-WEST	015	1.943	12.0000	32.58
	2_PRE-EAST	015	14.228	12.1000	177.25
	3_PRE-NORTH	015	.446	11.9000	8.08

TOTAL FLOW INTO: OUTFALL

HYG file	HYG ID	HYG tag	Volume ac-ft	Peak Time hrs	Peak Flow cfs
	OUTFALL	015	16.618	12.0500	203.18

TOTAL NODE INFLOW...
HYG file =
HYG ID = OUTFALL
HYG Tag = 015

Peak Discharge =	203.18 cfs
Time to Peak =	12.0500 hrs
HYG Volume =	16.618 ac-ft

HYDROGRAPH ORDINATES (cfs)
Output Time increment = .0500 hrs
Time on left represents time for first value in each row.

Time hrs					
7.8000	.00	.00	.00	.00	.00
8.0500	.00	.01	.01	.02	.03
8.3000	.05	.07	.09	.12	.15
8.5500	.19	.23	.26	.31	.35
8.8000	.39	.44	.49	.55	.61
9.0500	.67	.73	.79	.86	.92
9.3000	.98	1.04	1.10	1.15	1.21
9.5500	1.27	1.33	1.39	1.46	1.54
9.8000	1.62	1.71	1.80	1.90	2.01
10.0500	2.12	2.24	2.36	2.50	2.64
10.3000	2.79	2.95	3.11	3.29	3.47
10.5500	3.66	3.87	4.09	4.33	4.58
10.8000	4.86	5.15	5.47	5.80	6.14
11.0500	6.51	6.92	7.37	7.89	8.48
11.3000	9.14	9.87	10.66	11.50	12.46
11.5500	14.12	17.07	22.15	30.32	42.37
11.8000	59.22	84.29	120.03	156.97	187.28
12.0500	203.18	198.75	181.79	157.52	131.15
12.3000	107.10	87.80	73.43	62.70	54.21
12.5500	47.40	41.83	37.32	33.70	30.80
12.8000	28.48	26.62	25.06	23.72	22.56
13.0500	21.55	20.68	19.94	19.27	18.67
13.3000	18.12	17.61	17.14	16.69	16.26
13.5500	15.84	15.44	15.05	14.68	14.33
13.8000	14.00	13.68	13.36	13.05	12.75
14.0500	12.46	12.19	11.94	11.71	11.51
14.3000	11.34	11.19	11.05	10.93	10.81
14.5500	10.70	10.59	10.48	10.38	10.28
14.8000	10.18	10.07	9.97	9.87	9.77
15.0500	9.67	9.57	9.46	9.36	9.26
15.3000	9.15	9.05	8.95	8.85	8.74
15.5500	8.64	8.54	8.43	8.33	8.22
15.8000	8.12	8.01	7.91	7.80	7.70

HYDROGRAPH ORDINATES (cfs)
Output Time increment = .0500 hrs
Time on left represents time for first value in each row.

Time hrs					
16.0500	7.59	7.50	7.41	7.33	7.26
16.3000	7.19	7.14	7.09	7.05	7.00
16.5500	6.96	6.92	6.88	6.85	6.81
16.8000	6.77	6.74	6.70	6.66	6.62
17.0500	6.59	6.55	6.51	6.48	6.44
17.3000	6.40	6.37	6.33	6.29	6.26
17.5500	6.22	6.18	6.14	6.11	6.07
17.8000	6.03	5.99	5.96	5.92	5.88
18.0500	5.84	5.81	5.77	5.73	5.69
18.3000	5.65	5.62	5.58	5.54	5.50
18.5500	5.46	5.43	5.39	5.35	5.31
18.8000	5.27	5.23	5.20	5.16	5.12
19.0500	5.08	5.04	5.01	4.97	4.93
19.3000	4.89	4.85	4.81	4.77	4.74
19.5500	4.70	4.66	4.62	4.58	4.54
19.8000	4.50	4.46	4.42	4.39	4.35
20.0500	4.31	4.27	4.24	4.21	4.19
20.3000	4.17	4.16	4.14	4.13	4.12
20.5500	4.11	4.10	4.10	4.09	4.08
20.8000	4.07	4.07	4.06	4.05	4.04
21.0500	4.04	4.03	4.02	4.01	4.01
21.3000	4.00	3.99	3.99	3.98	3.97
21.5500	3.96	3.96	3.95	3.94	3.93
21.8000	3.93	3.92	3.91	3.91	3.90
22.0500	3.89	3.88	3.88	3.87	3.86
22.3000	3.85	3.85	3.84	3.83	3.82
22.5500	3.82	3.81	3.80	3.79	3.79
22.8000	3.78	3.77	3.76	3.76	3.75
23.0500	3.74	3.74	3.73	3.72	3.71
23.3000	3.71	3.70	3.69	3.68	3.68
23.5500	3.67	3.66	3.65	3.65	3.64
23.8000	3.63	3.62	3.62	3.61	3.59
24.0500	3.43	3.03	2.55	2.03	1.52
24.3000	1.09	.76	.53	.37	.26
24.5500	.18	.13	.09	.06	.04
24.8000	.03	.02	.01	.01	.00
25.0500	.00	.00			

SUMMARY FOR HYDROGRAPH ADDITION
at Node: **OUTFALL**

HYG Directory: C:\Haestad\PPKW\Job Files\ProgressPoint-PhaseII_200-2180-20\

Upstream Link ID	Upstream Node ID	HYG file	HYG ID	HYG tag
ROUTE PRE-WEST	1_PRE-WEST		1_PRE-WEST	025
ROUTE PRE-EAST	2_PRE-EAST		2_PRE-EAST	025
ROUTE PRE-NORTH	3_PRE-NORTH		3_PRE-NORTH	025

INFLOWS TO: OUTFALL

HYG file	HYG ID	HYG tag	Volume ac-ft	Peak Time hrs	Peak Flow cfs
	1_PRE-WEST	025	2.376	11.9500	39.83
	2_PRE-EAST	025	17.211	12.1000	214.57
	3_PRE-NORTH	025	.538	11.9000	9.76

TOTAL FLOW INTO: OUTFALL

HYG file	HYG ID	HYG tag	Volume ac-ft	Peak Time hrs	Peak Flow cfs
	OUTFALL	025	20.124	12.0500	246.78

TOTAL NODE INFLOW...
HYG file =
HYG ID = OUTFALL
HYG Tag = 025

Peak Discharge =	246.78 cfs
Time to Peak =	12.0500 hrs
HYG Volume =	20.124 ac-ft

HYDROGRAPH ORDINATES (cfs)
Output Time increment = .0500 hrs
Time on left represents time for first value in each row.

Time hrs					
7.2000	.00	.00	.00	.00	.00
7.4500	.01	.01	.02	.03	.04
7.7000	.07	.09	.12	.14	.17
7.9500	.20	.24	.27	.30	.34
8.2000	.37	.41	.45	.50	.55
8.4500	.60	.66	.72	.78	.84
8.7000	.91	.97	1.05	1.12	1.20
8.9500	1.28	1.36	1.44	1.52	1.61
9.2000	1.69	1.76	1.84	1.91	1.98
9.4500	2.05	2.12	2.19	2.26	2.34
9.7000	2.42	2.52	2.63	2.74	2.87
9.9500	3.00	3.14	3.28	3.44	3.60
10.2000	3.78	3.96	4.16	4.37	4.58
10.4500	4.81	5.05	5.29	5.56	5.84
10.7000	6.15	6.48	6.83	7.21	7.61
10.9500	8.03	8.47	8.94	9.45	10.03
11.2000	10.69	11.44	12.28	13.20	14.20
11.4500	15.26	16.46	18.56	22.33	28.78
11.7000	39.10	54.15	75.02	105.68	148.91
11.9500	193.04	228.68	246.78	240.47	219.24
12.2000	189.49	157.43	128.33	105.02	87.68
12.4500	74.74	64.53	56.34	49.66	44.26
12.7000	39.92	36.46	33.69	31.46	29.60
12.9500	28.00	26.61	25.42	24.39	23.50
13.2000	22.71	22.00	21.34	20.75	20.18
13.4500	19.65	19.14	18.64	18.16	17.71
13.7000	17.27	16.86	16.46	16.08	15.71
13.9500	15.35	14.99	14.64	14.32	14.02
14.2000	13.76	13.52	13.32	13.14	12.98
14.4500	12.83	12.69	12.56	12.43	12.30
14.7000	12.18	12.06	11.94	11.82	11.70
14.9500	11.58	11.46	11.34	11.22	11.10
15.2000	10.97	10.85	10.73	10.61	10.49

HYDROGRAPH ORDINATES (cfs)
Output Time increment = .0500 hrs
Time on left represents time for first value in each row.

Time hrs					
15.4500	10.37	10.25	10.13	10.00	9.88
15.7000	9.76	9.63	9.51	9.38	9.26
15.9500	9.14	9.01	8.89	8.78	8.67
16.2000	8.58	8.49	8.42	8.36	8.30
16.4500	8.25	8.20	8.15	8.10	8.06
16.7000	8.01	7.97	7.92	7.88	7.84
16.9500	7.79	7.75	7.71	7.66	7.62
17.2000	7.57	7.53	7.49	7.44	7.40
17.4500	7.36	7.31	7.27	7.22	7.18
17.7000	7.14	7.09	7.05	7.00	6.96
17.9500	6.92	6.87	6.83	6.78	6.74
18.2000	6.69	6.65	6.61	6.56	6.52
18.4500	6.47	6.43	6.38	6.34	6.29
18.7000	6.25	6.20	6.16	6.11	6.07
18.9500	6.02	5.98	5.93	5.89	5.84
19.2000	5.80	5.75	5.71	5.66	5.62
19.4500	5.57	5.53	5.48	5.44	5.39
19.7000	5.34	5.30	5.25	5.21	5.16
19.9500	5.12	5.07	5.03	4.99	4.95
20.2000	4.92	4.89	4.87	4.85	4.83
20.4500	4.82	4.81	4.80	4.79	4.78
20.7000	4.77	4.76	4.75	4.74	4.73
20.9500	4.72	4.72	4.71	4.70	4.69
21.2000	4.68	4.67	4.66	4.66	4.65
21.4500	4.64	4.63	4.62	4.61	4.60
21.7000	4.60	4.59	4.58	4.57	4.56
21.9500	4.55	4.54	4.53	4.53	4.52
22.2000	4.51	4.50	4.49	4.48	4.47
22.4500	4.46	4.46	4.45	4.44	4.43
22.7000	4.42	4.41	4.40	4.39	4.39
22.9500	4.38	4.37	4.36	4.35	4.34
23.2000	4.33	4.32	4.32	4.31	4.30
23.4500	4.29	4.28	4.27	4.26	4.25
23.7000	4.25	4.24	4.23	4.22	4.21
23.9500	4.20	4.18	3.99	3.53	2.96
24.2000	2.36	1.77	1.27	.88	.62
24.4500	.43	.30	.21	.15	.10
24.7000	.07	.05	.03	.02	.01
24.9500	.01	.00	.00	.00	

SUMMARY FOR HYDROGRAPH ADDITION
at Node: **OUTFALL**

HYG Directory: C:\Haestad\PPKW\Job Files\ProgressPoint-PhaseII_200-2180-20\

Upstream Link ID	Upstream Node ID	HYG file	HYG ID	HYG tag
ROUTE PRE-WEST	1_PRE-WEST		1_PRE-WEST	100
ROUTE PRE-EAST	2_PRE-EAST		2_PRE-EAST	100
ROUTE PRE-NORTH	3_PRE-NORTH		3_PRE-NORTH	100

INFLOWS TO: OUTFALL

HYG file	HYG ID	HYG tag	Volume ac-ft	Peak Time hrs	Peak Flow cfs
	1_PRE-WEST	100	3.521	11.9500	59.16
	2_PRE-EAST	100	25.028	12.1000	310.71
	3_PRE-NORTH	100	.778	11.9000	14.08

TOTAL FLOW INTO: OUTFALL

HYG file	HYG ID	HYG tag	Volume ac-ft	Peak Time hrs	Peak Flow cfs
	OUTFALL	100	29.327	12.0500	359.42

TOTAL NODE INFLOW...
HYG file =
HYG ID = OUTFALL
HYG Tag = 100

Peak Discharge =	359.42 cfs
Time to Peak =	12.0500 hrs
HYG Volume =	29.327 ac-ft

HYDROGRAPH ORDINATES (cfs)
Output Time increment = .0500 hrs
Time on left represents time for first value in each row.

Time hrs					
6.0000	.00	.00	.00	.00	.01
6.2500	.01	.01	.03	.04	.07
6.5000	.09	.13	.16	.20	.24
6.7500	.28	.32	.36	.41	.45
7.0000	.49	.54	.59	.64	.69
7.2500	.74	.80	.85	.90	.96
7.5000	1.01	1.06	1.12	1.17	1.23
7.7500	1.29	1.34	1.40	1.46	1.51
8.0000	1.57	1.63	1.69	1.76	1.83
8.2500	1.91	1.99	2.08	2.18	2.28
8.5000	2.39	2.49	2.61	2.72	2.84
8.7500	2.97	3.09	3.22	3.36	3.50
9.0000	3.64	3.78	3.92	4.05	4.18
9.2500	4.30	4.41	4.52	4.62	4.71
9.5000	4.81	4.90	5.01	5.12	5.26
9.7500	5.41	5.58	5.77	5.98	6.19
10.0000	6.42	6.66	6.92	7.19	7.47
10.2500	7.78	8.10	8.44	8.80	9.17
10.5000	9.55	9.94	10.37	10.82	11.31
10.7500	11.84	12.41	13.01	13.65	14.31
11.0000	14.99	15.72	16.53	17.44	18.47
11.2500	19.65	20.96	22.39	23.94	25.57
11.5000	27.42	30.71	36.65	46.77	62.81
11.7500	85.82	117.20	162.34	224.77	287.15
12.0000	336.11	359.42	347.90	315.46	271.42
12.2500	224.67	182.56	148.96	123.99	105.39
12.5000	90.75	79.04	69.53	61.84	55.68
12.7500	50.77	46.85	43.69	41.06	38.81
13.0000	36.86	35.18	33.73	32.50	31.39
13.2500	30.39	29.48	28.64	27.86	27.12
13.5000	26.40	25.71	25.04	24.40	23.80
13.7500	23.22	22.67	22.14	21.62	21.11
14.0000	20.62	20.14	19.69	19.28	18.91

HYDROGRAPH ORDINATES (cfs)
Output Time increment = .0500 hrs
Time on left represents time for first value in each row.

Time hrs					
14.2500	18.58	18.30	18.05	17.83	17.62
14.5000	17.43	17.24	17.06	16.89	16.71
14.7500	16.55	16.37	16.21	16.04	15.88
15.0000	15.71	15.54	15.37	15.20	15.03
15.2500	14.86	14.70	14.53	14.36	14.19
15.5000	14.02	13.86	13.69	13.52	13.35
15.7500	13.18	13.00	12.83	12.66	12.50
16.0000	12.32	12.16	12.00	11.85	11.72
16.2500	11.61	11.51	11.42	11.34	11.26
16.5000	11.19	11.13	11.06	11.00	10.94
16.7500	10.88	10.81	10.75	10.69	10.63
17.0000	10.57	10.51	10.45	10.39	10.33
17.2500	10.27	10.21	10.15	10.09	10.03
17.5000	9.97	9.91	9.85	9.79	9.73
17.7500	9.67	9.60	9.54	9.48	9.42
18.0000	9.36	9.30	9.24	9.18	9.12
18.2500	9.05	8.99	8.93	8.87	8.81
18.5000	8.75	8.69	8.62	8.56	8.50
18.7500	8.44	8.38	8.32	8.26	8.19
19.0000	8.13	8.07	8.01	7.95	7.88
19.2500	7.82	7.76	7.70	7.64	7.57
19.5000	7.51	7.45	7.39	7.33	7.26
19.7500	7.20	7.14	7.08	7.02	6.95
20.0000	6.89	6.83	6.77	6.72	6.68
20.2500	6.64	6.61	6.59	6.56	6.55
20.5000	6.53	6.52	6.50	6.49	6.47
20.7500	6.46	6.45	6.44	6.43	6.41
21.0000	6.40	6.39	6.38	6.37	6.35
21.2500	6.34	6.33	6.32	6.30	6.29
21.5000	6.28	6.27	6.26	6.24	6.23
21.7500	6.22	6.21	6.20	6.19	6.17
22.0000	6.16	6.15	6.14	6.13	6.11
22.2500	6.10	6.09	6.08	6.06	6.05
22.5000	6.04	6.03	6.02	6.00	5.99
22.7500	5.98	5.97	5.95	5.94	5.93
23.0000	5.92	5.91	5.90	5.88	5.87
23.2500	5.86	5.85	5.83	5.82	5.81
23.5000	5.80	5.79	5.77	5.76	5.75
23.7500	5.74	5.72	5.71	5.70	5.69
24.0000	5.66	5.40	4.78	4.01	3.19
24.2500	2.40	1.72	1.19	.83	.59
24.5000	.41	.29	.20	.14	.10
24.7500	.07	.04	.03	.02	.01
25.0000	.01	.00	.00		

III RUNOFF CALCULATIONS - DEVELOPED CONDITIONS

13. Network Schematic
14. Watershed Runoff Summaries - 15, 25, 100 yr Storms
15. Time of Concentration
16. Curve Number Determination
17. Developed Composite Hydrographs - 15, 25, 100 yr Storms
18. Basin 2 Volume Table
19. Outlet Control Structure - Data and Rating Curves
20. Basin 2 Stage-Storage-Discharge Table and Routing of 15, 25, 100 yr Storms

Job File: C:\Haestad\PPKW\Job Files\ProgressPoint-PhaseII_200-2180-20\R\Q.PPW
Rain Dir: C:\Haestad\PPKW\Job Files\ProgressPoint-PhaseII_200-2180-20\R\

==========
JOB TITLE
==========

Progress Point Phase II - Post-Developed Condition

Project No 200-2180.20

Detention Basin Storage Sizing and Runoff Routing

** Development Pending -
90 % Impervious Area Assumed **

Revised October 20, 2003

S/N: 4216015070C1 Stock & Associates
PondPack Ver: Compute Time: Date:

POST-DEVELOPMENT CONDITIONS

Table of Contents

********** NETWORK SCHEMATIC **********

Watershed... ..... Network Schematic 0.01

********** MASTER SUMMARY **********

Watershed..... Master Network Summary 1.01

********** DESIGN STORMS SUMMARY **********

STL-SCS..... Design Storms 2.01

********** TC CALCULATIONS **********

1_BYPASS-WEST... Tc Calcs 3.01

2_BYPASS-EAST... Tc Calcs 3.03

3_BYPASS-NORTH.. Tc Calcs 3.05

8_TO-BASIN..... Tc Calcs 3.07

********** CN CALCULATIONS **********

1_BYPASS-WEST... Runoff CN-Area 4.01

2_BYPASS-EAST... Runoff CN-Area 4.02

3_BYPASS-NORTH.. Runoff CN-Area 4.03

8_TO-BASIN..... Runoff CN-Area 4.04

********** RUNOFF HYDROGRAPHS **********

Unit Hyd. Equations 5.01

S/N:
PondPack Ver: Compute Time: Date:

Table of Contents (continued)

********** HYG ADDITION **********

OUTFALL TO CREEK 002
Node: Addition Summary 6.01

OUTFALL TO CREEK 015
Node: Addition Summary 6.11

OUTFALL TO CREEK 025
Node: Addition Summary 6.21

OUTFALL TO CREEK 100
Node: Addition Summary 6.31

********** POND VOLUMES **********

BASIN 2..... Vol: Planimeter 7.01

********** OUTLET STRUCTURES **********

BASIN 2 OUTLET 4 Outlet Input Data 8.01
Individual Outlet Curves 8.03
Composite Rating Curve 8.12

********** POND ROUTING **********

BASIN 2..... Pond E-V-Q Table 9.01

BASIN 2 OUT 002
Pond Routing Summary 9.06

BASIN 2 OUT 015
Pond Routing Summary 9.07

BASIN 2 OUT 025
Pond Routing Summary 9.08

BASIN 2 OUT 100
Pond Routing Summary 9.09

Type.... Network Schematic

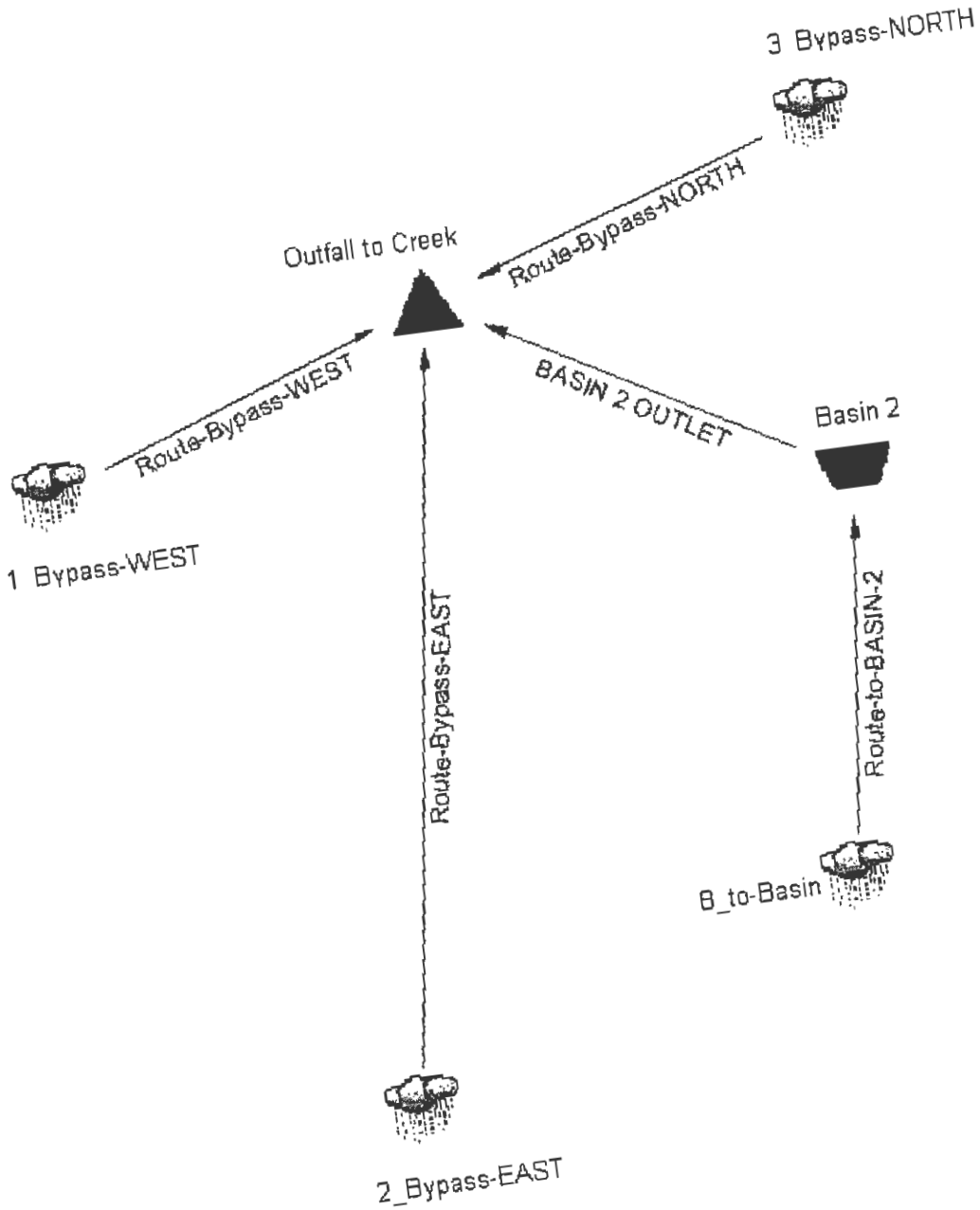

Progress Point - Phase II
Post-Developed Condition
Network Schematic

MASTER NETWORK SUMMARY
SCS Unit Hydrograph Method

(*Node=Outfall; +Node=Diversion;)
(Trun= HYG Truncation: Blank=None; L=Left; R=Rt; LR=Left&Rt)

Node ID	Type	Return Event	HYG Vol ac-ft	Qpeak hrs	Qpeak cfs	Max WSEL ft	Max Pond Storage ac-ft
1_BYPA5S-WEST	AREA	2	2.538	11.9250	43.63		
1_BYPASS-WEST	AREA	15	3.744	11.9250	62.95		
1_BYPASS-WEST	AREA	25	4.274	11.9250	71.37		
1_BYPASS-WE5T	AREA	100	5.611	11.9250	92.48		
2_BYPASS-EA5T	AREA	2	1.650	11.9250	28.36		
2_BYPASS-EA5T	AREA	15	2.434	11.9250	40.92		
2_BYPASS-EA5T	AREA	25	2.778	11.9250	46.39		
2_BYPASS-EA5T	AREA	100	3.647	11.9250	60.11		
3_BYPASS-NORTH	AREA	2	.508	11.9250	8.75		
3_BYPASS-NORTH	AREA	15	.749	11.9250	12.63		
3_BYPASS-NORTH	AREA	25	.855	11.9250	14.32		
3_BYPASS-NORTH	AREA	100	1.122	11.9250	18.55		
8_TO-BASIN	AREA	2	14.573	11.9250	254.65		
8_TO-BASIN	AREA	15	21.718	11.9250	370.48		
8_TO-BASIN	AREA	25	24.864	11.9250	420.88		
8_TO-BASIN	AREA	100	32.799	11.9250	547.07		
BASIN 2 IN	POND	2	14.573	11.9250	254.65		
BASIN 2 IN	POND	15	21.718	11.9250	370.48		
BASIN 2 IN	POND	25	24.864	11.9250	420.88		
BA5IN 2 IN	POND	100	32.799	11.9250	547.07		
BASIN 2 OUT	POND	2	14.566	12.1000	61.10	536.20	10.035
BA5IN 2 OUT	POND	15	21.709	12.1000	98.77	537.41	12.765
BA5IN 2 OUT	POND	25	24.854	12.0750	133.44	537.86	13.833
BASIN 2 OUT	POND	100	32.788	12.0500	260.65	538.71	15.880
*OUTFALL TO CREEK JCT		2	19.261	11.9250	120.02		
*OUTFALL TO CREEK JCT		15	28.635	11.9250	181.93		
*OUTFALL TO CREEK JCT		25	32.762	12.0250	209.73		
*OUTFALL TO CREEK JCT		100	43.169	12.0250	369.34		

File.... C:\Haestad\PPKW\Job Files\ProgressPoint-PhaseII_200-2180-20\R\
Title... Progress Point Phase II - Post-Developed Condition
Project No 200-2180.20

Detention Basin Storage Sizing and Runoff Routing

** Development Pending -
90 % Impervious Area Assumed **

DESIGN STORMS SUMMARY

Design Storm File,ID = STL-SCS

Storm Tag Name = 002

Data Type, File, ID = Synthetic Storm TypeII 24hr
Storm Frequency = 2 yr
Total Rainfall Depth= 3.5000 in
Duration Multiplier = 1
Resulting Duration = 24.0000 hrs
Resulting Start Time= .0000 hrs Step= .1000 hrs End= 24.0000 hrs

Storm Tag Name = 015

Data Type, File, ID = Synthetic Storm TypeII 24hr
Storm Frequency = 15 yr
Total Rainfall Depth= 4.9600 in
Duration Multiplier = 1
Resulting Duration = 24.0000 hrs
Resulting Start Time= .0000 hrs Step= .1000 hrs End= 24.0000 hrs

Storm Tag Name = 025

Data Type, File, ID = Synthetic Storm TypeII 24hr
Storm Frequency = 25 yr
Total Rainfall Depth= 5.6000 in
Duration Multiplier = 1
Resulting Duration = 24.0000 hrs
Resulting Start Time= .0000 hrs Step= .1000 hrs End= 24.0000 hrs

Storm Tag Name = 100

Data Type, File, ID = Synthetic Storm TypeII 24hr
Storm Frequency = 100 yr
Total Rainfall Depth= 7.2100 in
Duration Multiplier = 1
Resulting Duration = 24.0000 hrs
Resulting Start Time= .0000 hrs Step= .1000 hrs End= 24.0000 hrs

TIME OF CONCENTRATION CALCULATOR

Segment #1: Tc: User Defined

Segment #1 Time: .0833 hrs

Total Tc: .0833 hrs

Calculated Tc < Min.Tc:
Use Minimum Tc...
Use Tc = .0833 hrs

Tc Equations used...

==== User Defined ====

Tc = Value entered by user

Where: Tc = Time of concentration

TIME OF CONCENTRATION CALCULATOR

Segment #1: Tc: User Defined

Segment #1 Time: .0833 hrs

Total Tc: .0833 hrs

Calculated Tc < Min.Tc:
Use Minimum Tc...
Use Tc = .0833 hrs

Tc Equations used...

==== User Defined ====

Tc = Value entered by user

Where: Tc = Time of concentration

File.... C:\Haestad\PPKW\Job Files\ProgressPoint-PhaseII_200-2180-20\R\Q.PPW

TIME OF CONCENTRATION CALCULATOR

Segment #1: Tc: User Defined

Segment #1 Time: .0833 hrs

Total Tc: .0833 hrs

S/N: 4216015070C1 Stock & Associates
PondPack Ver: Compute Time: Date:

File.... C:\Haestad\PPKW\Job Files\ProgressPoint-PhaseII_200-2180-20\R\Q.PPW

Tc Equations used...

==== User Defined ==========

Tc = Value entered by user

Where: Tc = Time of concentration

File.... C:\Haestad\PPKW\Job Files\ProgressPoint-PhaseII_200-2180-20\R\Q.PPW

TIME OF CONCENTRATION CALCULATOR

Segment #1: Tc: Length & Vel.

Hydraulic Length 2100.00 ft
Avg.Velocity 10.00 ft/sec

Segment #1 Time: .0583 hrs

Total Tc: .0583 hrs

Calculated Tc < Min.Tc:
Use Minimum Tc...
Use Tc = .0833 hrs

File.... C:\Haestad\PPKW\Job Files\ProgressPoint-PhaseII_200-2180-20\R\Q.PPW

Tc Equations used...

==== User Defined Length & Velocity ====================================

Tc = (Lf / V) / (3600sec/hr)

Where: Tc = Time of concentration, hrs
Lf = Flow length, ft
V = Velocity, ft/sec

File.... C:\Haestad\PPKW\Job Files\ProgressPoint-PhaseII_200-2180-20\R\Q.PPW

RUNOFF CURVE NUMBER DATA

Soil/Surface Description	CN	Area acres	Impervious Adjustment %C	Impervious Adjustment %UC	Adjusted CN
Impervious Area	98	9.000			98.00
Good condition; grass cover > 75%	74	1.000			74.00
COMPOSITE AREA & WEIGHTED CN --->		10.000			95.60 (96)

S/N: 4216015070C1 Stock & Associates
PondPack Ver: Compute Time: Date:

File.... C:\Haestad\PPKW\Job Files\ProgressPoint-PhaseII_200-2180-20\R\Q.PPW

RUNOFF CURVE NUMBER DATA

Soil/Surface Description	CN	Area acres	Impervious Adjustment %C	Impervious Adjustment %UC	Adjusted CN
Impervious Area	98	5.850			98.00
Good condition; grass cover > 75%	74	.650			74.00
COMPOSITE AREA & WEIGHTED CN --->		6.500			95.60 (96)

S/N: 4216015070C1 Stock & Associates
PondPack Ver: Compute Time: Date:

File.... C:\Haestad\PPKW\Job Files\ProgressPoint-PhaseII_200-2180-20\R\Q.PPW

RUNOFF CURVE NUMBER DATA

Soil/Surface Description	CN	Area acres	Impervious Adjustment %C	Impervious Adjustment %UC	Adjusted CN
Paved; curbs and storm sewers	98	1.800			98.00
Good condition; grass cover > 75%	74	.200			74.00
COMPOSITE AREA & WEIGHTED CN --->		2.000			95.60 (96)

S/N: 421601507OC1 Stock & Associates
PondPack Ver: Compute Time: Date:

File.... C:\Haestad\PPKW\Job Files\ProgressPoint-PhaseII_200-2180-20\R\Q.PPW

RUNOFF CURVE NUMBER DATA

Soil/Surface Description	CN	Area acres	Impervious Adjustment %C	%UC	Adjusted CN
Impervious Area	98	49.000			98.00
Good condition; grass cover > 75%	74	5.500			74.00
Paved; open ditches (w/right-of-way	92	5.000			92.00
COMPOSITE AREA & WEIGHTED CN --->		59.500			95.28 (95)

S/N: 4216015070C1 Stock & Associates
PondPack Ver: Compute Time: Date:

SCS UNIT HYDROGRAPH METHOD
(Computational Notes)

DEFINITION OF TERMS: ----------

At = Total area (acres): At = Ai+Ap
Ai = Impervious area (acres)
Ap = Pervious area (acres)
CNi = Runoff curve number for impervious area
CNp = Runoff curve number for pervious area
fLoss = f loss constant infiltration (depth/time)
gKs = Saturated Hydraulic Conductivity (depth/time)
Md = Volumetric Moisture Deficit
Psi = Capillary Suction (length)
hK = Horton Infiltration Decay Rate (time^-1)
fo = Initial Infiltration Rate (depth/time)
fc = Ultimate(capacity)Infiltration Rate (depth/time)
Ia = Initial Abstraction (length)
dt = Computational increment (duration of unit excess rainfall)
Default dt is smallest value of 0.1333Tc, rtm, and th
(Smallest dt is then adjusted to match up with Tp)
UDdt = User specified override computational main time increment
(only used if UDdt is => .1333Tc)
D(t) = Point on distribution curve (fraction of P) for time step t

K = 2 / (1 + (Tr/Tp)): default K = 0.75: (for Tr/Tp = 1.67)
Ks = Hydrograph shape factor
= Unit Conversions * K:
= ((1hr/3600sec) * (1ft/12in) * ((5280ft)**2/sq.mi)) * K
Default Ks = 645.333 * 0.75 = 484

Lag = Lag time from center of excess runoff (dt) to Tp: Lag = 0.6Tc
P = Total precipitation depth, inches
Pa(t) = Accumulated rainfall at time step t
Pi(t) = Incremental rainfall at time step t
qp = Peak discharge (cfs) for 1in. runoff, for 1hr, for 1 sq.mi.
= (Ks * A * Q) / Tp (where Q = 1in. runoff, A=sq.mi.)
Qu(t) = Unit hydrograph ordinate (cfs) at time step t
Q(t) = Final hydrograph ordinate (cfs) at time step t
Rai(t)= Accumulated runoff (inches) at time step t for impervious area
Rap(t)= Accumulated runoff (inches) at time step t for pervious area
Rii(t)= Incremental runoff (inches) at time step t for impervious area
Rip(t)= Incremental runoff (inches) at time step t for pervious area
R(t) = Incremental weighted total runoff (inches)
Rtm = Time increment for rainfall table
Si = S for impervious area: Si = (1000/CNi) - 10
Sp = S for pervious area: 5p = (1000/CNp) - 10
t = Time step (row) number
Tc = Time of concentration
Tb = Time (hrs) of entire unit hydrograph: Tb = Tp + Tr
Tp = Time (hrs) to peak of a unit hydrograph: Tp = (dt/2) + Lag
Tr = Time (hrs) of receding limb of unit hydrograph: Tr = ratio of Tp

SCS UNIT HYDROGRAPH METHOD
(Computational Notes)

PRECIPITATION: ----------
Column (1): Time for time step t
Column (2): D(t) = Point on distribution curve for time step t
Column (3): Pi(t) = Pa(t) - Pa(t-1): Col.(4) - Preceding Col.(4)
Column (4): Pa(t) = D(t) x P: Col.(2) x P

PERVIOUS AREA RUNOFF (using SCS Runoff CN Method) ----------
Column (5): Rap(t) = Accumulated pervious runoff for time step t
If (Pa(t) is <= 0.2Sp) then use: Rap(t) = 0.0
If (Pa(t) is > 0.2Sp) then use:

Rap(t) = (Col.(4)-0.2Sp)**2 / (Col.(4)+0.8Sp)

Column (6): Rip(t) = Incremental pervious runoff for time step t
Rip(t) = Rap(t) - Rap(t-1)
Rip(t) = Col.(5) for current row - Col.(5) for preceding row.

IMPERVIOUS AREA RUNOFF ----------
Column (7 & 8)... Did not specify to use impervious areas.

INCREMENTAL WEIGHTED RUNOFF: ----------
Column (9): R(t) = (Ap/At) x Rip(t) + (Ai/At) x Rii(t)
R(t) = (Ap/At) x Col.(6) + (Ai/At) x Col.(8)

SCS UNIT HYDROGRAPH METHOD: ----------
Column (10): Q(t) is computed with the SCS unit hydrograph method
using R() and Qu().

SUMMARY FOR HYDROGRAPH ADDITION
at Node: OUTFALL TO CREEK

HYG Directory: C:\Haestad\PPKW\Job Files\ProgressPoint-PhaseII_200-2180-20\R\

Upstream Link ID	Upstream Node ID	HYG file	HYG ID	HYG tag
ROUTE-BYPASS-WES	1_BYPASS-WEST	work_pad.hyg	1_BYPASS-WEST	002
ROUTE-BYPASS-NOR	3_BYPASS-NORTH	work_pad.hyg	3_BYPASS-NORTH	002
ROUTE-BYPASS-EAS	2_BYPASS-EAST	work_pad.hyg	2_BYPASS-EAST	002
BASIN 2 OUTLET	BASIN 2 IN	work_pad.hyg	BASIN 2 OUTLET	002

INFLOWS TO: OUTFALL TO CREEK

HYG file	HYG ID	HYG tag	Volume ac-ft	Peak Time hrs	Peak Flow cfs
work_pad.hyg	1_BYPASS-WEST	002	2.538	11.9250	43.63
work_pad.hyg	3_BYPASS-NORTH	002	.508	11.9250	8.75
work_pad.hyg	2_BYPASS-EAST	002	1.650	11.9250	28.36
work_pad.hyg	BASIN 2 OUTLET	002	14.566	12.1000	61.10

TOTAL FLOW INTO: OUTFALL TO CREEK

HYG file	HYG ID	HYG tag	Volume ac-ft	Peak Time hrs	Peak Flow cfs
work_pad.hyg	OUTFALL TO CREEK	002	19.261	11.9250	120.02

TOTAL NODE INFLOW...
HYG file = C:\Haestad\PPKW\Job Files\ProgressPoint-PhaseII_200-2180-20\R\work_pad.hyg
HYG ID = OUTFALL TO CREEK
HYG Tag = 002

Peak Discharge =	120.02 cfs
Time to Peak =	11.9250 hrs
HYG Volume =	19.261 ac-ft

HYDROGRAPH ORDINATES (cfs)
Output Time increment = .0250 hrs
Time on left represents time for first value in each row.

Time hrs					
2.2000	.00	.00	.01	.01	.01
2.3250	.02	.02	.03	.03	.03
2.4500	.04	.04	.05	.05	.05
2.5750	.06	.06	.07	.07	.07
2.7000	.08	.08	.09	.09	.09
2.8250	.10	.10	.11	.11	.11
2.9500	.12	.12	.13	.13	.14
3.0750	.14	.14	.15	.15	.16
3.2000	.16	.17	.17	.18	.18
3.3250	.19	.19	.19	.20	.20
3.4500	.21	.21	.22	.22	.23
3.5750	.23	.24	.24	.25	.26
3.7000	.26	.27	.27	.28	.28
3.8250	.29	.29	.30	.30	.31
3.9500	.31	.32	.32	.33	.33
4.0750	.34	.35	.35	.36	.37
4.2000	.37	.38	.38	.39	.40
4.3250	.40	.41	.42	.42	.43
4.4500	.44	.44	.45	.46	.47
4.5750	.47	.48	.49	.49	.50
4.7000	.51	.51	.52	.53	.54
4.8250	.54	.55	.56	.57	.57
4.9500	.58	.59	.60	.61	.61
5.0750	.62	.63	.64	.65	.65
5.2000	.66	.67	.68	.69	.69
5.3250	.70	.71	.72	.73	.74
5.4500	.74	.75	.76	.77	.78
5.5750	.79	.80	.80	.81	.82
5.7000	.83	.84	.85	.86	.87
5.8250	.88	.89	.90	.90	.91
5.9500	.92	.93	.94	.95	.96
6.0750	.97	.98	.99	1.01	1.02
6.2000	1.04	1.05	1.06	1.08	1.09

HYDROGRAPH ORDINATES (cfs)
Output Time increment = .0250 hrs
Time on left represents time for first value in each row.

Time hrs					
6.3250	1.10	1.12	1.13	1.15	1.16
6.4500	1.17	1.19	1.20	1.22	1.23
6.5750	1.24	1.26	1.27	1.29	1.30
6.7000	1.32	1.33	1.34	1.36	1.37
6.8250	1.39	1.40	1.42	1.43	1.45
6.9500	1.46	1.48	1.49	1.50	1.52
7.0750	1.54	1.55	1.56	1.58	1.59
7.2000	1.61	1.62	1.64	1.65	1.67
7.3250	1.68	1.70	1.71	1.73	1.74
7.4500	1.76	1.78	1.79	1.80	1.82
7.5750	1.84	1.85	1.87	1.88	1.90
7.7000	1.92	1.94	1.96	1.98	2.00
7.8250	2.01	2.03	2.05	2.07	2.09
7.9500	2.11	2.13	2.14	2.16	2.19
8.0750	2.21	2.23	2.26	2.29	2.32
8.2000	2.35	2.37	2.40	2.44	2.47
8.3250	2.49	2.53	2.56	2.59	2.62
8.4500	2.65	2.69	2.72	2.75	2.78
8.5750	2.82	2.85	2.88	2.92	2.96
8.7000	2.99	3.02	3.06	3.10	3.13
8.8250	3.16	3.20	3.24	3.28	3.32
8.9500	3.36	3.41	3.45	3.48	3.52
9.0750	3.56	3.59	3.63	3.66	3.69
9.2000	3.72	3.75	3.78	3.80	3.83
9.3250	3.86	3.89	3.92	3.95	3.97
9.4500	4.00	4.03	4.06	4.09	4.13
9.5750	4.17	4.20	4.24	4.29	4.35
9.7000	4.39	4.44	4.49	4.55	4.60
9.8250	4.65	4.71	4.78	4.83	4.88
9.9500	4.95	5.01	5.07	5.12	5.20
10.0750	5.27	5.33	5.40	5.48	5.56
10.2000	5.63	5.70	5.79	5.88	5.95
10.3250	6.02	6.11	6.21	6.28	6.36
10.4500	6.45	6.55	6.64	6.73	6.84
10.5750	6.96	7.06	7.16	7.30	7.44
10.7000	7.55	7.66	7.80	7.95	8.07
10.8250	8.19	8.34	8.49	8.62	8.75
10.9500	8.91	9.08	9.22	9.37	9.59
11.0750	9.82	9.99	10.19	10.47	10.77
11.2000	10.99	11.22	11.54	11.86	12.12
11.3250	12.38	12.72	13.07	13.34	13.62
11.4500	13.98	14.36	14.69	15.61	17.97
11.5750	20.55	22.34	24.78	29.82	35.21
11.7000	39.00	43.18	50.43	58.07	63.78
11.8250	71.40	86.16	102.10	113.75	120.02
11.9500	119.38	116.94	116.83	114.29	102.44
12.0750	88.96	80.85	76.56	73.79	71.91

HYDROGRAPH ORDINATES (cfs)
Output Time increment = .0250 hrs
Time on left represents time for first value in each row.

Time hrs					
12.2000	70.60	69.50	68.26	67.08	66.11
12.3250	65.15	63.96	62.76	61.76	60.76
12.4500	59.54	58.31	57.27	56.29	55.22
12.5750	54.15	53.22	52.35	51.48	50.63
12.7000	49.84	49.09	48.29	47.50	46.78
12.8250	46.07	45.32	44.59	43.91	43.25
12.9500	42.55	41.85	41.21	40.60	39.96
13.0750	39.33	38.75	38.19	37.61	37.05
13.2000	36.52	36.00	35.48	34.95	34.46
13.3250	33.98	33.49	33.00	32.55	32.10
13.4500	31.64	31.18	30.75	30.34	29.91
13.5750	29.49	29.10	28.71	28.32	27.94
13.7000	27.58	27.22	26.85	26.49	26.15
13.8250	25.82	25.48	25.14	24.82	24.51
13.9500	24.18	23.87	23.57	23.28	22.99
14.0750	22.70	22.43	22.17	21.90	21.65
14.2000	21.41	21.17	20.93	20.70	20.47
14.3250	20.25	20.02	19.80	19.59	19.39
14.4500	19.18	18.98	18.79	18.60	18.40
14.5750	18.21	18.02	17.84	17.67	17.49
14.7000	17.32	17.16	16.99	16.82	16.66
14.8250	16.50	16.34	16.18	16.04	15.89
14.9500	15.74	15.59	15.45	15.32	15.18
15.0750	15.04	14.91	14.78	14.64	14.50
15.2000	14.38	14.25	14.13	14.00	13.89
15.3250	13.78	13.65	13.53	13.42	13.31
15.4500	13.20	13.09	12.98	12.87	12.76
15.5750	12.65	12.55	12.44	12.34	12.24
15.7000	12.15	12.05	11.95	11.85	11.76
15.8250	11.67	11.57	11.48	11.39	11.30
15.9500	11.21	11.11	11.03	10.94	10.86
16.0750	10.77	10.69	10.62	10.54	10.47
16.2000	10.39	10.33	10.26	10.19	10.12
16.3250	10.05	9.99	9.92	9.85	9.79
16.4500	9.73	9.66	9.60	9.54	9.48
16.5750	9.42	9.36	9.30	9.24	9.19
16.7000	9.13	9.08	9.02	8.97	8.91
16.8250	8.86	8.81	8.76	8.72	8.67
16.9500	8.62	8.57	8.52	8.47	8.43
17.0750	8.38	8.34	8.29	8.24	8.20
17.2000	8.15	8.11	8.07	8.02	7.98
17.3250	7.94	7.90	7.86	7.81	7.77
17.4500	7.73	7.69	7.66	7.62	7.58
17.5750	7.54	7.50	7.46	7.43	7.39
17.7000	7.36	7.32	7.29	7.25	7.22
17.8250	7.18	7.15	7.12	7.08	7.05
17.9500	7.02	6.98	6.95	6.92	6.89

HYDROGRAPH ORDINATES (cfs)
Output Time increment = .0250 hrs
Time on left represents time for first value in each row.

Time hrs					
18.0750	6.86	6.83	6.80	6.76	6.73
18.2000	6.70	6.67	6.64	6.61	6.58
18.3250	6.55	6.52	6.49	6.46	6.43
18.4500	6.40	6.37	6.35	6.32	6.29
18.5750	6.26	6.23	6.21	6.18	6.15
18.7000	6.12	6.10	6.07	6.04	6.01
18.8250	5.99	5.96	5.94	5.92	5.89
18.9500	5.87	5.84	5.82	5.79	5.77
19.0750	5.74	5.72	5.70	5.67	5.65
19.2000	5.62	5.60	5.58	5.56	5.53
19.3250	5.51	5.49	5.46	5.44	5.42
19.4500	5.39	5.37	5.35	5.33	5.31
19.5750	5.28	5.26	5.24	5.22	5.19
19.7000	5.17	5.15	5.13	5.10	5.08
19.8250	5.06	5.04	5.02	5.00	4.98
19.9500	4.96	4.93	4.91	4.89	4.87
20.0750	4.85	4.83	4.82	4.80	4.78
20.2000	4.76	4.75	4.73	4.71	4.70
20.3250	4.68	4.66	4.65	4.63	4.62
20.4500	4.60	4.59	4.57	4.56	4.55
20.5750	4.53	4.52	4.51	4.49	4.48
20.7000	4.47	4.46	4.44	4.43	4.42
20.8250	4.40	4.39	4.38	4.37	4.36
20.9500	4.34	4.33	4.32	4.31	4.30
21.0750	4.29	4.28	4.27	4.25	4.24
21.2000	4.23	4.22	4.21	4.20	4.19
21.3250	4.18	4.17	4.16	4.15	4.14
21.4500	4.13	4.12	4.11	4.10	4.09
21.5750	4.08	4.07	4.06	4.05	4.04
21.7000	4.03	4.02	4.01	4.00	3.99
21.8250	3.98	3.97	3.97	3.96	3.95
21.9500	3.94	3.93	3.92	3.91	3.91
22.0750	3.90	3.89	3.88	3.87	3.86
22.2000	3.86	3.85	3.84	3.83	3.83
22.3250	3.82	3.81	3.80	3.79	3.78
22.4500	3.78	3.77	3.76	3.76	3.75
22.5750	3.74	3.73	3.73	3.72	3.71
22.7000	3.71	3.70	3.69	3.68	3.68
22.8250	3.67	3.66	3.66	3.65	3.64
22.9500	3.64	3.63	3.62	3.62	3.61
23.0750	3.60	3.60	3.59	3.58	3.58
23.2000	3.57	3.56	3.56	3.55	3.55
23.3250	3.54	3.53	3.53	3.52	3.51
23.4500	3.51	3.50	3.50	3.49	3.49
23.5750	3.48	3.47	3.47	3.46	3.46
23.7000	3.45	3.45	3.44	3.43	3.43
23.8250	3.42	3.42	3.41	3.41	3.40

HYDROGRAPH ORDINATES (cfs)
Output Time increment = .0250 hrs
Time on left represents time for first value in each row.

Time hrs					
23.9500	3.40	3.39	3.38	3.32	3.11
24.0750	2.88	2.73	2.65	2.60	2.56
24.2000	2.53	2.50	2.47	2.45	2.42
24.3250	2.40	2.37	2.35	2.32	2.30
24.4500	2.28	2.25	2.23	2.21	2.18
24.5750	2.16	2.14	2.12	2.10	2.08
24.7000	2.05	2.03	2.01	1.99	1.97
24.8250	1.95	1.93	1.91	1.89	1.87
24.9500	1.85	1.83	1.82	1.80	1.78
25.0750	1.76	1.74	1.73	1.71	1.70
25.2000	1.68	1.67	1.66	1.64	1.63
25.3250	1.61	1.60	1.58	1.57	1.56
25.4500	1.54	1.53	1.52	1.50	1.49
25.5750	1.48	1.46	1.45	1.44	1.43
25.7000	1.41	1.40	1.39	1.38	1.37
25.8250	1.35	1.34	1.33	1.32	1.31
25.9500	1.30	1.29	1.27	1.26	1.25
26.0750	1.24	1.23	1.22	1.21	1.20
26.2000	1.19	1.18	1.17	1.16	1.15
26.3250	1.14	1.13	1.12	1.11	1.10
26.4500	1.09	1.08	1.07	1.06	1.05
26.5750	1.04	1.03	1.02	1.02	1.01
26.7000	1.00	.99	.98	.97	.96
26.8250	.96	.95	.94	.94	.93
26.9500	.92	.92	.91	.90	.90
27.0750	.89	.89	.88	.87	.87
27.2000	.86	.86	.85	.85	.84
27.3250	.83	.83	.82	.82	.81
27.4500	.81	.80	.80	.79	.78
27.5750	.78	.77	.77	.76	.76
27.7000	.75	.75	.74	.74	.73
27.8250	.73	.72	.72	.71	.71
27.9500	.70	.70	.69	.69	.69
28.0750	.68	.68	.67	.67	.66
28.2000	.66	.65	.65	.64	.64
28.3250	.64	.63	.63	.62	.62
28.4500	.62	.61	.61	.60	.60
28.5750	.59	.59	.59	.58	.58
28.7000	.57	.57	.57	.56	.56
28.8250	.56	.55	.55	.54	.54
28.9500	.54	.53	.53	.53	.52
29.0750	.52	.52	.51	.51	.51
29.2000	.50	.50	.50	.49	.49
29.3250	.49	.48	.48	.48	.47
29.4500	.47	.47	.46	.46	.46
29.5750	.45	.45	.45	.44	.44
29.7000	.44	.44	.43	.43	.43

HYDROGRAPH ORDINATES (cfs)
Output Time increment = .0250 hrs
Time on left represents time for first value in each row.

Time hrs					
29.8250	.42	.42	.42	.42	.41
29.9500	.41	.41	.40	.40	.40
30.0750	.40	.39	.39	.39	.39
30.2000	.38	.38	.38	.38	.37
30.3250	.37	.37	.37	.36	.36
30.4500	.36	.36	.35	.35	.35
30.5750	.35	.34	.34	.34	.34
30.7000	.34	.33	.33	.33	.33
30.8250	.33	.33	.33	.33	.32
30.9500	.32	.32	.32	.32	.32
31.0750	.32	.32	.32	.31	.31
31.2000	.31	.31	.31	.31	.31
31.3250	.31	.30	.30	.30	.30
31.4500	.30	.30	.30	.30	.30
31.5750	.29	.29	.29	.29	.29
31.7000	.29	.29	.29	.29	.29
31.8250	.28	.28	.28	.28	.28
31.9500	.28	.28	.28	.28	.27
32.0750	.27	.27	.27	.27	.27
32.2000	.27	.27	.27	.27	.26
32.3250	.26	.26	.26	.26	.26
32.4500	.26	.26	.26	.26	.25
32.5750	.25	.25	.25	.25	.25
32.7000	.25	.25	.25	.25	.25
32.8250	.24	.24	.24	.24	.24
32.9500	.24	.24	.24	.24	.24
33.0750	.24	.23	.23	.23	.23
33.2000	.23	.23	.23	.23	.23
33.3250	.23	.23	.23	.22	.22
33.4500	.22	.22	.22	.22	.22
33.5750	.22	.22	.22	.22	.22
33.7000	.21	.21	.21	.21	.21
33.8250	.21	.21	.21	.21	.21
33.9500	.21	.21	.21	.20	.20
34.0750	.20	.20	.20	.20	.20
34.2000	.20	.20	.20	.20	.20
34.3250	.20	.19	.19	.19	.19
34.4500	.19	.19	.19	.19	.19
34.5750	.19	.19	.19	.19	.19
34.7000	.19	.18	.18	.18	.18
34.8250	.18	.18	.18	.18	.18
34.9500	.18	.18	.18	.18	.18
35.0750	.18	.17	.17	.17	.17
35.2000	.17	.17	.17	.17	.17
35.3250	.17	.17	.17	.17	.17
35.4500	.17	.16	.16	.16	.16
35.5750	.16	.16	.16	.16	.16

HYDROGRAPH ORDINATES (cfs)
Output Time increment = .0250 hrs
Time on left represents time for first value in each row.

Time hrs					
35.7000	.16	.16	.16	.16	.16
35.8250	.16	.16	.16	.15	.15
35.9500	.15	.15	.15	.15	.15
36.0750	.15	.15	.15	.15	.15
36.2000	.15	.15	.15	.15	.15
36.3250	.15	.14	.14	.14	.14
36.4500	.14	.14	.14	.14	.14
36.5750	.14	.14	.14	.14	.14
36.7000	.14	.14	.14	.14	.14
36.8250	.13	.13	.13	.13	.13
36.9500	.13	.13	.13	.13	.13
37.0750	.13	.13	.13	.13	.13
37.2000	.13	.13	.13	.13	.13
37.3250	.13	.12	.12	.12	.12
37.4500	.12	.12	.12	.12	.12
37.5750	.12	.12	.12	.12	.12
37.7000	.12	.12	.12	.12	.12
37.8250	.12	.12	.12	.11	.11
37.9500	.11	.11	.11	.11	.11
38.0750	.11	.11	.11	.11	.11
38.2000	.11	.11	.11	.11	.11
38.3250	.11	.11	.11	.11	.11
38.4500	.11	.11	.11	.10	.10
38.5750	.10	.10	.10	.10	.10
38.7000	.10	.10	.10	.10	.10
38.8250	.10	.10	.10	.10	.10
38.9500	.10	.10	.10	.10	.10
39.0750	.10	.10	.10	.10	.10
39.2000	.09	.09	.09	.09	.09
39.3250	.09	.09	.09	.09	.09
39.4500	.09	.09	.09	.09	.09
39.5750	.09	.09	.09	.09	.09
39.7000	.09	.09	.09	.09	.09
39.8250	.09	.09	.09	.09	.08
39.9500	.08	.08	.08	.08	.08
40.0750	.08	.08	.08	.08	.08
40.2000	.08	.08	.08	.08	.08
40.3250	.08	.08	.08	.08	.08
40.4500	.08	.08	.08	.08	.08
40.5750	.08	.08	.08	.08	.08
40.7000	.08	.08	.08	.07	.07
40.8250	.07	.07	.07	.07	.07
40.9500	.07	.07	.07	.07	.07
41.0750	.07	.07	.07	.07	.07
41.2000	.07	.07	.07	.07	.07
41.3250	.07	.07	.07	.07	.07
41.4500	.07	.07	.07	.07	.07

HYDROGRAPH ORDINATES (cfs)
Output Time increment = .0250 hrs
Time on left represents time for first value in each row.

Time hrs					
41.5750	.07	.07	.07	.07	.07
41.7000	.07	.07	.06	.06	.06
41.8250	.06	.06	.06	.06	.06
41.9500	.06	.06	.06	.06	.06
42.0750	.06	.06	.06	.06	.06
42.2000	.06	.06	.06	.06	.06
42.3250	.06	.06	.06	.06	.06
42.4500	.06	.06	.06	.06	.06
42.5750	.06	.06	.06	.06	.06
42.7000	.06	.06	.06	.06	.06
42.8250	.06	.05	.05	.05	.05
42.9500	.05	.05	.05	.05	.05
43.0750	.05	.05	.05	.05	.05
43.2000	.05	.05	.05	.05	.05
43.3250	.05	.05	.05	.05	.05
43.4500	.05	.05	.05	.05	.05
43.5750	.05	.05	.05	.05	.05
43.7000	.05	.05	.05	.05	.05
43.8250	.05	.05	.05	.05	.05
43.9500	.05	.05	.05	.05	.05
44.0750	.05	.05	.05	.05	.05
44.2000	.04	.04	.04	.04	.04
44.3250	.04	.04	.04	.04	.04
44.4500	.04	.04	.04	.04	.04
44.5750	.04	.04	.04	.04	.04
44.7000	.04	.04	.04	.04	.04
44.8250	.04	.04	.04	.04	.04
44.9500	.04	.04	.04	.04	.04
45.0750	.04	.04	.04	.04	.04
45.2000	.04	.04	.04	.04	.04
45.3250	.04	.04	.04	.04	.04
45.4500	.04	.04	.04	.04	.04
45.5750	.04	.04	.04	.04	.04
45.7000	.04	.04	.04	.04	.04
45.8250	.04	.04	.04	.03	.03
45.9500	.03	.03	.03	.03	.03
46.0750	.03	.03	.03	.03	.03
46.2000	.03	.03	.03	.03	.03
46.3250	.03	.03	.03	.03	.03
46.4500	.03	.03	.03	.03	.03
46.5750	.03	.03	.03	.03	.03
46.7000	.03	.03	.03	.03	.03
46.8250	.03	.03	.03	.03	.03
46.9500	.03	.03	.03	.03	.03
47.0750	.03	.03	.03	.03	.03
47.2000	.03	.03	.03	.03	.03
47.3250	.03	.03	.03	.03	.03

HYDROGRAPH ORDINATES (cfs)
Output Time increment = .0250 hrs
Time on left represents time for first value in each row.

Time hrs					
47.4500	.03	.03	.03	.03	.03
47.5750	.03	.03	.03	.03	.03
47.7000	.03	.03	.03	.03	.03
47.8250	.03	.03	.03	.03	.03
47.9500	.03	.03	.03	.03	.03
48.0750	.03	.03	.03	.02	.02
48.2000	.02	.02	.02	.02	.02
48.3250	.02	.02	.02	.02	.02
48.4500	.02	.02	.02	.02	.02
48.5750	.02	.02	.02	.02	.02
48.7000	.02	.02	.02	.02	.02
48.8250	.02	.02	.02	.02	.02
48.9500	.02	.02	.02	.02	.02
49.0750	.02	.02	.02	.02	.02
49.2000	.02	.02	.02	.02	.02
49.3250	.02	.02	.02	.02	.02
49.4500	.02	.02	.02	.02	.02
49.5750	.02	.02	.02	.02	.02
49.7000	.02	.02	.02	.02	.02
49.8250	.02	.02	.02	.02	.02
49.9500	.02	.02	.02	.02	.02
50.0750	.02	.02	.02	.02	.02
50.2000	.02	.02	.02	.02	.02
50.3250	.02	.02	.02	.02	.02
50.4500	.02	.02	.02	.02	.02
50.5750	.02	.02	.02	.02	.02
50.7000	.02	.02	.02	.02	.02
50.8250	.02	.02	.02	.02	.02
50.9500	.02	.02	.02	.02	.02
51.0750	.02	.02	.02	.02	.02
51.2000	.02	.02	.02	.02	.02
51.3250	.02	.02	.02	.02	.02
51.4500	.02	.02	.02	.02	.02
51.5750	.01	.01	.01	.01	.01
51.7000	.01	.01	.01	.01	.01
51.8250	.01	.01	.01	.01	.01
51.9500	.01	.01	.01	.01	.01
52.0750	.01	.01	.01	.01	.01
52.2000	.01	.01	.01	.01	.01
52.3250	.01	.01	.01	.01	.01
52.4500	.01	.01	.01	.01	.01
52.5750	.01	.01	.01	.01	.01

SUMMARY FOR HYDROGRAPH ADDITION
at Node: OUTFALL TO CREEK

HYG Directory: C:\Haestad\PPKW\Job Files\ProgressPoint-PhaseII_200-2180-20\R\

Upstream Link ID	Upstream Node ID	HYG file	HYG ID	HYG tag
ROUTE-BYPASS-WES	1_BYPASS-WEST	work_pad.hyg	1_BYPASS-WEST	015
ROUTE-BYPASS-NOR	3_BYPASS-NORTH	work_pad.hyg	3_BYPASS-NORTH	015
ROUTE-BYPASS-EAS	2_BYPASS-EAST	work_pad.hyg	2_BYPASS-EAST	015
BASIN 2 OUTLET	BASIN 2 IN	work_pad.hyg	BASIN 2 OUTLET	015

INFLOWS TO: OUTFALL TO CREEK

HYG file	HYG ID	HYG tag	Volume ac-ft	Peak Time hrs	Peak Flow cfs
work_pad.hyg	1_BYPASS-WEST	015	3.744	11.9250	62.95
work_pad.hyg	3_BYPASS-NORTH	015	.749	11.9250	12.63
work_pad.hyg	2_BYPASS-EAST	015	2.434	11.9250	40.92
work_pad.hyg	BASIN 2 OUTLET	015	21.709	12.1000	98.77

TOTAL FLOW INTO: OUTFALL TO CREEK

HYG file	HYG ID	HYG tag	Volume ac-ft	Peak Time hrs	Peak Flow cfs
work_pad.hyg	OUTFALL TO CREEK	015	28.635	11.9250	181.93

TOTAL NODE INFLOW...
HYG file = C:\Haestad\PPKW\Job Files\ProgressPoint-PhaseII_200-2180-20\R\work_pad.hyg
HYG ID = OUTFALL TO CREEK
HYG Tag = 015

Peak Discharge =	181.93 cfs
Time to Peak =	11.9250 hrs
HYG Volume =	28.635 ac-ft

HYDROGRAPH ORDINATES (cfs)
Output Time increment = .0250 hrs
Time on left represents time for first value in each row.

Time hrs					
1.6000	.00	.00	.01	.02	.02
1.7250	.03	.04	.04	.05	.06
1.8500	.07	.07	.08	.09	.09
1.9750	.10	.11	.11	.12	.13
2.1000	.14	.14	.15	.16	.16
2.2250	.17	.18	.19	.19	.20
2.3500	.21	.22	.22	.23	.24
2.4750	.25	.26	.26	.27	.28
2.6000	.29	.29	.30	.31	.32
2.7250	.33	.34	.34	.35	.36
2.8500	.37	.38	.39	.40	.40
2.9750	.41	.42	.43	.44	.45
3.1000	.46	.47	.47	.48	.49
3.2250	.50	.51	.52	.53	.54
3.3500	.55	.56	.56	.57	.58
3.4750	.59	.60	.61	.62	.63
3.6000	.64	.65	.66	.67	.68
3.7250	.69	.70	.71	.72	.73
3.8500	.74	.75	.76	.77	.78
3.9750	.79	.79	.80	.82	.83
4.1000	.84	.85	.86	.87	.88
4.2250	.89	.91	.92	.93	.94
4.3500	.95	.97	.98	.99	1.00
4.4750	1.01	1.03	1.04	1.05	1.06
4.6000	1.07	1.09	1.10	1.12	1.14
4.7250	1.16	1.17	1.19	1.21	1.23
4.8500	1.25	1.26	1.28	1.30	1.32
4.9750	1.34	1.36	1.37	1.39	1.41
5.1000	1.43	1.45	1.47	1.49	1.50
5.2250	1.52	1.54	1.56	1.58	1.60
5.3500	1.62	1.64	1.66	1.67	1.69
5.4750	1.71	1.73	1.75	1.77	1.79
5.6000	1.81	1.83	1.85	1.87	1.89

HYDROGRAPH ORDINATES (cfs)
Output Time increment = .0250 hrs
Time on left represents time for first value in each row.

Time hrs					
5.7250	1.91	1.93	1.95	1.97	1.99
5.8500	2.01	2.03	2.05	2.08	2.10
5.9750	2.13	2.15	2.17	2.20	2.22
6.1000	2.25	2.27	2.30	2.32	2.35
6.2250	2.37	2.39	2.42	2.44	2.47
6.3500	2.49	2.52	2.54	2.56	2.59
6.4750	2.62	2.64	2.66	2.69	2.71
6.6000	2.74	2.76	2.79	2.81	2.84
6.7250	2.86	2.89	2.91	2.94	2.96
6.8500	2.99	3.01	3.04	3.06	3.09
6.9750	3.11	3.14	3.17	3.20	3.23
7.1000	3.25	3.28	3.31	3.34	3.37
7.2250	3.39	3.42	3.45	3.48	3.50
7.3500	3.53	3.56	3.59	3.62	3.65
7.4750	3.67	3.70	3.73	3.76	3.79
7.6000	3.81	3.84	3.87	3.90	3.92
7.7250	3.95	3.98	4.01	4.04	4.06
7.8500	4.09	4.12	4.15	4.17	4.20
7.9750	4.23	4.26	4.29	4.32	4.36
8.1000	4.40	4.44	4.49	4.54	4.58
8.2250	4.62	4.68	4.73	4.78	4.82
8.3500	4.88	4.93	4.98	5.03	5.08
8.4750	5.14	5.19	5.24	5.30	5.36
8.6000	5.41	5.46	5.52	5.58	5.63
8.7250	5.69	5.75	5.81	5.87	5.92
8.8500	5.99	6.05	6.11	6.16	6.24
8.9750	6.31	6.37	6.42	6.49	6.55
9.1000	6.60	6.65	6.70	6.75	6.79
9.2250	6.84	6.88	6.93	6.97	7.02
9.3500	7.06	7.10	7.15	7.19	7.23
9.4750	7.27	7.31	7.36	7.42	7.48
9.6000	7.53	7.59	7.67	7.76	7.83
9.7250	7.90	7.99	8.09	8.16	8.24
9.8500	8.33	8.43	8.51	8.59	8.68
9.9750	8.78	8.87	8.95	9.06	9.18
10.1000	9.27	9.36	9.49	9.62	9.73
10.2250	9.83	9.97	10.11	10.22	10.34
10.3500	10.48	10.63	10.75	10.87	11.02
10.4750	11.17	11.30	11.43	11.61	11.79
10.6000	11.94	12.09	12.29	12.51	12.69
10.7250	12.86	13.09	13.32	13.50	13.69
10.8500	13.93	14.17	14.36	14.56	14.81
10.9750	15.06	15.28	15.51	15.85	16.20
11.1000	16.47	16.77	17.21	17.66	18.01
11.2250	18.37	18.86	19.36	19.75	20.14
11.3500	20.66	21.20	21.63	22.07	22.63
11.4750	23.21	23.71	25.08	28.63	32.52

HYDROGRAPH ORDINATES (cfs)
Output Time increment = .0250 hrs
Time on left represents time for first value in each row.

Time hrs					
11.6000	35.24	38.94	46.49	54.59	60.36
11.7250	66.71	77.59	89.06	97.75	109.20
11.8500	131.07	154.72	172.22	181.93	181.61
11.9750	178.56	178.76	175.35	158.45	139.00
12.1000	127.11	120.61	116.27	113.17	110.92
12.2250	108.97	106.82	104.76	103.02	101.30
12.3500	99.27	97.23	95.47	93.74	91.69
12.4750	89.64	87.87	86.20	84.38	82.60
12.6000	81.01	79.53	78.05	76.61	75.27
12.7250	73.97	72.63	71.32	70.09	68.90
12.8500	67.66	66.45	65.32	64.22	63.07
12.9750	61.94	60.89	59.88	58.84	57.82
13.1000	56.87	55.95	55.02	54.12	53.27
13.2250	52.43	51.59	50.75	49.97	49.21
13.3500	48.42	47.65	46.93	46.23	45.50
13.4750	44.78	44.11	43.47	42.80	42.15
13.6000	41.53	40.94	40.34	39.74	39.18
13.7250	38.63	38.07	37.52	37.00	36.49
13.8500	35.97	35.46	34.98	34.50	34.01
13.9750	33.53	33.08	32.65	32.21	31.78
14.1000	31.37	30.98	30.59	30.21	29.84
14.2250	29.48	29.13	28.78	28.45	28.12
14.3500	27.79	27.47	27.16	26.85	26.55
14.4750	26.26	25.98	25.70	25.41	25.13
14.6000	24.87	24.61	24.35	24.10	23.85
14.7250	23.61	23.37	23.12	22.89	22.67
14.8500	22.44	22.22	22.01	21.80	21.59
14.9750	21.37	21.17	20.98	20.77	20.58
15.1000	20.39	20.21	20.02	19.83	19.65
15.2250	19.48	19.30	19.13	18.96	18.80
15.3500	18.63	18.45	18.30	18.14	17.99
15.4750	17.83	17.69	17.54	17.38	17.23
15.6000	17.09	16.95	16.80	16.66	16.52
15.7250	16.39	16.25	16.11	15.98	15.86
15.8500	15.73	15.60	15.48	15.35	15.22
15.9750	15.09	14.97	14.86	14.74	14.63
16.1000	14.52	14.41	14.31	14.20	14.11
16.2250	14.01	13.91	13.82	13.73	13.64
16.3500	13.54	13.45	13.36	13.28	13.19
16.4750	13.10	13.02	12.94	12.85	12.77
16.6000	12.69	12.61	12.54	12.46	12.39
16.7250	12.32	12.24	12.17	12.10	12.03
16.8500	11.96	11.89	11.83	11.76	11.69
16.9750	11.62	11.56	11.50	11.43	11.37
17.1000	11.31	11.25	11.19	11.12	11.06
17.2250	11.01	10.95	10.89	10.84	10.79
17.3500	10.73	10.67	10.62	10.57	10.52

HYDROGRAPH ORDINATES (cfs)
Output Time increment = .0250 hrs
Time on left represents time for first value in each row.

Time hrs					
17.4750	10.46	10.41	10.37	10.31	10.26
17.6000	10.21	10.16	10.11	10.06	10.02
17.7250	9.97	9.92	9.87	9.82	9.78
17.8500	9.73	9.69	9.64	9.60	9.55
17.9750	9.51	9.46	9.42	9.38	9.33
18.1000	9.29	9.25	9.21	9.17	9.13
18.2250	9.09	9.05	9.01	8.97	8.94
18.3500	8.90	8.85	8.82	8.78	8.74
18.4750	8.70	8.67	8.63	8.59	8.56
18.6000	8.52	8.48	8.45	8.41	8.38
18.7250	8.34	8.31	8.27	8.23	8.20
18.8500	8.16	8.13	8.10	8.06	8.03
18.9750	7.99	7.96	7.93	7.89	7.86
19.1000	7.83	7.79	7.76	7.72	7.69
19.2250	7.66	7.63	7.60	7.57	7.54
19.3500	7.51	7.47	7.44	7.41	7.38
19.4750	7.35	7.33	7.30	7.26	7.23
19.6000	7.20	7.18	7.15	7.12	7.09
19.7250	7.06	7.03	7.00	6.97	6.94
19.8500	6.91	6.88	6.86	6.83	6.80
19.9750	6.77	6.74	6.71	6.69	6.66
20.1000	6.64	6.61	6.59	6.56	6.54
20.2250	6.52	6.50	6.48	6.45	6.43
20.3500	6.41	6.39	6.37	6.35	6.33
20.4750	6.31	6.29	6.27	6.25	6.23
20.6000	6.21	6.19	6.17	6.16	6.14
20.7250	6.12	6.10	6.08	6.07	6.05
20.8500	6.04	6.02	6.01	5.99	5.98
20.9750	5.96	5.94	5.93	5.91	5.90
21.1000	5.89	5.87	5.86	5.84	5.83
21.2250	5.81	5.80	5.79	5.77	5.76
21.3500	5.74	5.73	5.72	5.70	5.69
21.4750	5.68	5.67	5.65	5.64	5.63
21.6000	5.61	5.60	5.59	5.58	5.57
21.7250	5.56	5.54	5.53	5.52	5.50
21.8500	5.49	5.48	5.47	5.46	5.45
21.9750	5.44	5.43	5.41	5.40	5.39
22.1000	5.38	5.37	5.36	5.35	5.34
22.2250	5.33	5.32	5.31	5.30	5.29
22.3500	5.28	5.27	5.26	5.25	5.24
22.4750	5.23	5.22	5.21	5.20	5.19
22.6000	5.18	5.17	5.16	5.16	5.15
22.7250	5.14	5.13	5.12	5.11	5.10
22.8500	5.09	5.08	5.08	5.07	5.06
22.9750	5.05	5.04	5.03	5.02	5.01
23.1000	5.01	5.00	4.99	4.98	4.97
23.2250	4.96	4.96	4.95	4.94	4.93

HYDROGRAPH ORDINATES (cfs)
Output Time increment = .0250 hrs
Time on left represents time for first value in each row.

Time hrs					
23.3500	4.92	4.91	4.91	4.90	4.89
23.4750	4.89	4.88	4.87	4.86	4.85
23.6000	4.84	4.84	4.83	4.82	4.82
23.7250	4.81	4.80	4.79	4.79	4.78
23.8500	4.77	4.77	4.76	4.76	4.75
23.9750	4.74	4.73	4.64	4.34	4.01
24.1000	3.80	3.68	3.60	3.54	3.49
24.2250	3.45	3.40	3.36	3.33	3.29
24.3500	3.25	3.21	3.18	3.14	3.10
24.4750	3.07	3.03	3.00	2.96	2.93
24.6000	2.89	2.86	2.83	2.79	2.76
24.7250	2.73	2.70	2.67	2.64	2.62
24.8500	2.59	2.56	2.54	2.51	2.49
24.9750	2.46	2.44	2.41	2.39	2.36
25.1000	2.34	2.31	2.29	2.27	2.24
25.2250	2.22	2.20	2.18	2.15	2.13
25.3500	2.11	2.09	2.07	2.05	2.02
25.4750	2.00	1.98	1.96	1.94	1.92
25.6000	1.90	1.88	1.86	1.85	1.83
25.7250	1.81	1.79	1.77	1.75	1.74
25.8500	1.72	1.71	1.69	1.68	1.66
25.9750	1.65	1.64	1.62	1.61	1.59
26.1000	1.58	1.57	1.55	1.54	1.53
26.2250	1.51	1.50	1.49	1.47	1.46
26.3500	1.45	1.43	1.42	1.41	1.40
26.4750	1.39	1.37	1.36	1.35	1.34
26.6000	1.33	1.31	1.30	1.29	1.28
26.7250	1.27	1.26	1.25	1.24	1.23
26.8500	1.22	1.20	1.19	1.18	1.17
26.9750	1.16	1.15	1.14	1.13	1.12
27.1000	1.11	1.10	1.09	1.09	1.08
27.2250	1.07	1.06	1.05	1.04	1.03
27.3500	1.02	1.01	1.00	.99	.99
27.4750	.98	.97	.96	.95	.95
27.6000	.94	.93	.93	.92	.91
27.7250	.91	.90	.90	.89	.88
27.8500	.88	.87	.87	.86	.85
27.9750	.85	.84	.84	.83	.83
28.1000	.82	.82	.81	.80	.80
28.2250	.79	.79	.78	.78	.77
28.3500	.77	.76	.76	.75	.75
28.4750	.74	.74	.73	.73	.72
28.6000	.72	.71	.71	.70	.70
28.7250	.69	.69	.68	.68	.67
28.8500	.67	.67	.66	.66	.65
28.9750	.65	.64	.64	.63	.63
29.1000	.63	.62	.62	.61	.61

HYDROGRAPH ORDINATES (cfs)
Output Time increment = .0250 hrs
Time on left represents time for first value in each row.

Time hrs					
29.2250	.61	.60	.60	.59	.59
29.3500	.59	.58	.58	.57	.57
29.4750	.57	.56	.56	.55	.55
29.6000	.55	.54	.54	.54	.53
29.7250	.53	.53	.52	.52	.51
29.8500	.51	.51	.50	.50	.50
29.9750	.49	.49	.49	.48	.48
30.1000	.48	.47	.47	.47	.46
30.2250	.46	.46	.46	.45	.45
30.3500	.45	.44	.44	.44	.43
30.4750	.43	.43	.43	.42	.42
30.6000	.42	.41	.41	.41	.41
30.7250	.40	.40	.40	.40	.39
30.8500	.39	.39	.38	.38	.38
30.9750	.38	.37	.37	.37	.37
31.1000	.36	.36	.36	.36	.35
31.2250	.35	.35	.35	.35	.34
31.3500	.34	.34	.34	.34	.33
31.4750	.33	.33	.33	.33	.33
31.6000	.33	.33	.32	.32	.32
31.7250	.32	.32	.32	.32	.32
31.8500	.31	.31	.31	.31	.31
31.9750	.31	.31	.31	.31	.30
32.1000	.30	.30	.30	.30	.30
32.2250	.30	.30	.30	.29	.29
32.3500	.29	.29	.29	.29	.29
32.4750	.29	.29	.28	.28	.28
32.6000	.28	.28	.28	.28	.28
32.7250	.28	.28	.27	.27	.27
32.8500	.27	.27	.27	.27	.27
32.9750	.27	.27	.26	.26	.26
33.1000	.26	.26	.26	.26	.26
33.2250	.26	.26	.25	.25	.25
33.3500	.25	.25	.25	.25	.25
33.4750	.25	.25	.25	.24	.24
33.6000	.24	.24	.24	.24	.24
33.7250	.24	.24	.24	.24	.23
33.8500	.23	.23	.23	.23	.23
33.9750	.23	.23	.23	.23	.23
34.1000	.23	.22	.22	.22	.22
34.2250	.22	.22	.22	.22	.22
34.3500	.22	.22	.22	.21	.21
34.4750	.21	.21	.21	.21	.21
34.6000	.21	.21	.21	.21	.21
34.7250	.21	.20	.20	.20	.20
34.8500	.20	.20	.20	.20	.20
34.9750	.20	.20	.20	.20	.19

HYDROGRAPH ORDINATES (cfs)
Output Time increment = .0250 hrs
Time on left represents time for first value in each row.

Time hrs					
35.1000	.19	.19	.19	.19	.19
35.2250	.19	.19	.19	.19	.19
35.3500	.19	.19	.19	.18	.18
35.4750	.18	.18	.18	.18	.18
35.6000	.18	.18	.18	.18	.18
35.7250	.18	.18	.18	.17	.17
35.8500	.17	.17	.17	.17	.17
35.9750	.17	.17	.17	.17	.17
36.1000	.17	.17	.17	.17	.16
36.2250	.16	.16	.16	.16	.16
36.3500	.16	.16	.16	.16	.16
36.4750	.16	.16	.16	.16	.16
36.6000	.16	.15	.15	.15	.15
36.7250	.15	.15	.15	.15	.15
36.8500	.15	.15	.15	.15	.15
36.9750	.15	.15	.15	.15	.14
37.1000	.14	.14	.14	.14	.14
37.2250	.14	.14	.14	.14	.14
37.3500	.14	.14	.14	.14	.14
37.4750	.14	.14	.14	.13	.13
37.6000	.13	.13	.13	.13	.13
37.7250	.13	.13	.13	.13	.13
37.8500	.13	.13	.13	.13	.13
37.9750	.13	.13	.13	.13	.12
38.1000	.12	.12	.12	.12	.12
38.2250	.12	.12	.12	.12	.12
38.3500	.12	.12	.12	.12	.12
38.4750	.12	.12	.12	.12	.12
38.6000	.12	.11	.11	.11	.11
38.7250	.11	.11	.11	.11	.11
38.8500	.11	.11	.11	.11	.11
38.9750	.11	.11	.11	.11	.11
39.1000	.11	.11	.11	.11	.11
39.2250	.10	.10	.10	.10	.10
39.3500	.10	.10	.10	.10	.10
39.4750	.10	.10	.10	.10	.10
39.6000	.10	.10	.10	.10	.10
39.7250	.10	.10	.10	.10	.10
39.8500	.10	.10	.09	.09	.09
39.9750	.09	.09	.09	.09	.09
40.1000	.09	.09	.09	.09	.09
40.2250	.09	.09	.09	.09	.09
40.3500	.09	.09	.09	.09	.09
40.4750	.09	.09	.09	.09	.09
40.6000	.09	.09	.08	.08	.08
40.7250	.08	.08	.08	.08	.08
40.8500	.08	.08	.08	.08	.08

HYDROGRAPH ORDINATES (cfs)
Output Time increment = .0250 hrs
Time on left represents time for first value in each row.

Time hrs					
40.9750	.08	.08	.08	.08	.08
41.1000	.08	.08	.08	.08	.08
41.2250	.08	.08	.08	.08	.08
41.3500	.08	.08	.08	.08	.08
41.4750	.08	.07	.07	.07	.07
41.6000	.07	.07	.07	.07	.07
41.7250	.07	.07	.07	.07	.07
41.8500	.07	.07	.07	.07	.07
41.9750	.07	.07	.07	.07	.07
42.1000	.07	.07	.07	.07	.07
42.2250	.07	.07	.07	.07	.07
42.3500	.07	.07	.07	.07	.06
42.4750	.06	.06	.06	.06	.06
42.6000	.06	.06	.06	.06	.06
42.7250	.06	.06	.06	.06	.06
42.8500	.06	.06	.06	.06	.06
42.9750	.06	.06	.06	.06	.06
43.1000	.06	.06	.06	.06	.06
43.2250	.06	.06	.06	.06	.06
43.3500	.06	.06	.06	.06	.06
43.4750	.06	.06	.06	.06	.05
43.6000	.05	.05	.05	.05	.05
43.7250	.05	.05	.05	.05	.05
43.8500	.05	.05	.05	.05	.05
43.9750	.05	.05	.05	.05	.05
44.1000	.05	.05	.05	.05	.05
44.2250	.05	.05	.05	.05	.05
44.3500	.05	.05	.05	.05	.05
44.4750	.05	.05	.05	.05	.05
44.6000	.05	.05	.05	.05	.05
44.7250	.05	.05	.05	.05	.05
44.8500	.05	.05	.05	.04	.04
44.9750	.04	.04	.04	.04	.04
45.1000	.04	.04	.04	.04	.04
45.2250	.04	.04	.04	.04	.04
45.3500	.04	.04	.04	.04	.04
45.4750	.04	.04	.04	.04	.04
45.6000	.04	.04	.04	.04	.04
45.7250	.04	.04	.04	.04	.04
45.8500	.04	.04	.04	.04	.04
45.9750	.04	.04	.04	.04	.04
46.1000	.04	.04	.04	.04	.04
46.2250	.04	.04	.04	.04	.04
46.3500	.04	.04	.04	.04	.04
46.4750	.04	.04	.04	.04	.04
46.6000	.03	.03	.03	.03	.03
46.7250	.03	.03	.03	.03	.03

HYDROGRAPH ORDINATES (cfs)
Output Time increment = .0250 hrs
Time on left represents time for first value in each row.

Time hrs					
46.8500	.03	.03	.03	.03	.03
46.9750	.03	.03	.03	.03	.03
47.1000	.03	.03	.03	.03	.03
47.2250	.03	.03	.03	.03	.03
47.3500	.03	.03	.03	.03	.03
47.4750	.03	.03	.03	.03	.03
47.6000	.03	.03	.03	.03	.03
47.7250	.03	.03	.03	.03	.03
47.8500	.03	.03	.03	.03	.03
47.9750	.03	.03	.03	.03	.03
48.1000	.03	.03	.03	.03	.03
48.2250	.03	.03	.03	.03	.03
48.3500	.03	.03	.03	.03	.03
48.4750	.03	.03	.03	.03	.03
48.6000	.03	.03	.03	.03	.03
48.7250	.03	.03	.03	.03	.03
48.8500	.03	.02	.02	.02	.02
48.9750	.02	.02	.02	.02	.02
49.1000	.02	.02	.02	.02	.02
49.2250	.02	.02	.02	.02	.02
49.3500	.02	.02	.02	.02	.02
49.4750	.02	.02	.02	.02	.02
49.6000	.02	.02	.02	.02	.02
49.7250	.02	.02	.02	.02	.02
49.8500	.02	.02	.02	.02	.02
49.9750	.02	.02	.02	.02	.02
50.1000	.02	.02	.02	.02	.02
50.2250	.02	.02	.02	.02	.02
50.3500	.02	.02	.02	.02	.02
50.4750	.02	.02	.02	.02	.02
50.6000	.02	.02	.02	.02	.02
50.7250	.02	.02	.02	.02	.02
50.8500	.02	.02	.02	.02	.02
50.9750	.02	.02	.02	.02	.02
51.1000	.02	.02	.02	.02	.02
51.2250	.02	.02	.02	.02	.02
51.3500	.02	.02	.02	.02	.02
51.4750	.02	.02	.02	.02	.02
51.6000	.02	.02	.02	.02	.02
51.7250	.02	.02	.02	.02	.02
51.8500	.02	.02	.02	.02	.02

SUMMARY FOR HYDROGRAPH ADDITION
at Node: OUTFALL TO CREEK

HYG Directory: C:\Haestad\PPKW\Job Files\ProgressPoint-PhaseII_200-2180-20\R\

Upstream Link ID	Upstream Node ID	HYG file	HYG ID	HYG tag
ROUTE-BYPASS-WES	1_BYPASS-WEST	work_pad.hyg	1_BYPASS-WEST	025
ROUTE-BYPASS-NOR	3_BYPASS-NORTH	work_pad.hyg	3_BYPASS-NORTH	025
ROUTE-BYPASS-EAS	2_BYPASS-EAST	work_pad.hyg	2_BYPASS-EAST	025
BASIN 2 OUTLET	BASIN 2 IN	work_pad.hyg	BASIN 2 OUTLET	025

INFLOWS TO: OUTFALL TO CREEK

HYG file	HYG ID	HYG tag	Volume ac-ft	Peak Time hrs	Peak Flow cfs
work_pad.hyg	1_BYPASS-WEST	025	4.274	11.9250	71.37
work_pad.hyg	3_BYPASS-NORTH	025	.855	11.9250	14.32
work_pad.hyg	2_BYPASS-EAST	025	2.778	11.9250	46.39
work_pad.hyg	BASIN 2 OUTLET	025	24.854	12.0750	133.44

TOTAL FLOW INTO: OUTFALL TO CREEK

HYG file	HYG ID	HYG tag	Volume ac-ft	Peak Time hrs	Peak Flow cfs
work_pad.hyg	OUTFALL TO CREEK	025	32.762	12.0250	209.73

TOTAL NODE INFLOW...
HYG file = C:\Haestad\PPKW\Job Files\ProgressPoint-PhaseII_200-2180-20\R\work_pad.hyg
HYG ID = OUTFALL TO CREEK
HYG Tag = 025

Peak Discharge =	209.73 cfs
Time to Peak =	12.0250 hrs
HYG Volume =	32.762 ac-ft

HYDROGRAPH ORDINATES (cfs)
Output Time increment = .0250 hrs
Time on left represents time for first value in each row.

Time hrs					
1.4250	.00	.00	.01	.02	.03
1.5500	.03	.04	.05	.06	.07
1.6750	.08	.09	.10	.10	.11
1.8000	.12	.13	.14	.15	.16
1.9250	.16	.17	.18	.19	.20
2.0500	.21	.22	.23	.24	.25
2.1750	.25	.26	.27	.28	.29
2.3000	.30	.31	.32	.33	.34
2.4250	.35	.36	.37	.38	.39
2.5500	.40	.41	.42	.43	.44
2.6750	.45	.46	.47	.48	.49
2.8000	.50	.51	.52	.53	.54
2.9250	.55	.56	.57	.58	.59
3.0500	.61	.62	.63	.64	.65
3.1750	.66	.67	.68	.69	.71
3.3000	.72	.73	.74	.75	.76
3.4250	.77	.78	.80	.81	.82
3.5500	.83	.84	.85	.86	.87
3.6750	.89	.90	.91	.92	.93
3.8000	.94	.95	.97	.98	.99
3.9250	1.01	1.02	1.03	1.04	1.05
4.0500	1.06	1.08	1.09	1.10	1.12
4.1750	1.13	1.15	1.17	1.19	1.21
4.3000	1.23	1.25	1.27	1.29	1.31
4.4250	1.32	1.34	1.37	1.38	1.40
4.5500	1.42	1.45	1.46	1.48	1.51
4.6750	1.53	1.55	1.57	1.59	1.61
4.8000	1.63	1.65	1.67	1.69	1.71
4.9250	1.73	1.76	1.78	1.80	1.82
5.0500	1.84	1.86	1.88	1.90	1.93
5.1750	1.95	1.97	1.99	2.01	2.04
5.3000	2.06	2.08	2.10	2.13	2.16
5.4250	2.18	2.21	2.24	2.26	2.29

HYDROGRAPH ORDINATES (cfs)
Output Time increment = .0250 hrs
Time on left represents time for first value in each row.

Time hrs					
5.5500	2.32	2.34	2.37	2.40	2.42
5.6750	2.45	2.48	2.50	2.53	2.56
5.8000	2.58	2.61	2.64	2.67	2.69
5.9250	2.72	2.75	2.78	2.80	2.83
6.0500	2.86	2.88	2.91	2.94	2.97
6.1750	2.99	3.02	3.05	3.07	3.10
6.3000	3.13	3.16	3.19	3.22	3.25
6.4250	3.28	3.31	3.34	3.37	3.40
6.5500	3.43	3.47	3.50	3.53	3.56
6.6750	3.59	3.62	3.65	3.68	3.71
6.8000	3.74	3.77	3.81	3.84	3.87
6.9250	3.90	3.93	3.96	3.99	4.02
7.0500	4.05	4.09	4.11	4.14	4.18
7.1750	4.21	4.24	4.27	4.30	4.33
7.3000	4.36	4.39	4.42	4.46	4.49
7.4250	4.52	4.56	4.59	4.62	4.66
7.5500	4.69	4.73	4.76	4.79	4.82
7.6750	4.86	4.89	4.92	4.96	4.99
7.8000	5.02	5.05	5.09	5.12	5.15
7.9250	5.18	5.22	5.25	5.28	5.32
8.0500	5.36	5.41	5.44	5.49	5.54
8.1750	5.60	5.65	5.69	5.75	5.81
8.3000	5.86	5.91	5.98	6.04	6.10
8.4250	6.15	6.22	6.29	6.35	6.40
8.5500	6.47	6.54	6.60	6.66	6.73
8.6750	6.81	6.87	6.93	7.00	7.08
8.8000	7.14	7.21	7.28	7.36	7.42
8.9250	7.49	7.57	7.65	7.72	7.78
9.0500	7.85	7.92	7.98	8.04	8.10
9.1750	8.15	8.20	8.26	8.31	8.36
9.3000	8.41	8.46	8.51	8.56	8.61
9.4250	8.66	8.71	8.76	8.80	8.86
9.5500	8.93	9.00	9.06	9.12	9.22
9.6750	9.31	9.39	9.47	9.58	9.68
9.8000	9.77	9.85	9.96	10.07	10.16
9.9250	10.25	10.37	10.48	10.58	10.68
10.0500	10.81	10.94	11.04	11.15	11.30
10.1750	11.45	11.57	11.69	11.85	12.01
10.3000	12.14	12.27	12.44	12.61	12.75
10.4250	12.89	13.06	13.24	13.38	13.54
10.5500	13.74	13.95	14.12	14.29	14.53
10.6750	14.78	14.98	15.18	15.45	15.71
10.8000	15.93	16.14	16.41	16.69	16.92
10.9250	17.14	17.44	17.73	17.98	18.25
11.0500	18.64	19.04	19.35	19.69	20.20
11.1750	20.72	21.14	21.55	22.11	22.68
11.3000	23.13	23.59	24.20	24.82	25.32

HYDROGRAPH ORDINATES (cfs)
Output Time increment = .0250 hrs
Time on left represents time for first value in each row.

Time hrs					
11.4250	25.82	26.47	27.13	27.71	29.30
11.5500	33.35	37.82	40.96	45.21	53.86
11.6750	63.16	69.82	77.13	89.61	102.79
11.8000	112.80	125.96	150.97	178.04	198.14
11.9250	209.39	209.25	205.95	206.55	209.73
12.0500	198.28	179.38	164.72	154.15	145.55
12.1750	138.43	132.70	127.83	123.32	119.60
12.3000	116.68	114.70	112.36	110.02	107.99
12.4250	105.99	103.64	101.28	99.24	97.32
12.5500	95.23	93.18	91.35	89.65	87.94
12.6750	86.29	84.75	83.26	81.72	80.21
12.8000	78.81	77.44	76.02	74.63	73.34
12.9250	72.08	70.76	69.47	68.27	67.12
13.0500	65.93	64.76	63.68	62.64	61.58
13.1750	60.55	59.58	58.63	57.67	56.72
13.3000	55.83	54.96	54.07	53.20	52.38
13.4250	51.58	50.76	49.94	49.19	48.46
13.5500	47.70	46.96	46.27	45.60	44.91
13.6750	44.23	43.61	42.99	42.36	41.73
13.8000	41.15	40.58	39.99	39.41	38.86
13.9250	38.34	37.79	37.24	36.74	36.25
14.0500	35.76	35.28	34.82	34.38	33.93
14.1750	33.51	33.10	32.70	32.30	31.91
14.3000	31.54	31.18	30.81	30.45	30.10
14.4250	29.76	29.42	29.09	28.78	28.47
14.5500	28.15	27.84	27.55	27.26	26.97
14.6750	26.69	26.42	26.15	25.88	25.61
14.8000	25.35	25.10	24.85	24.60	24.37
14.9250	24.14	23.90	23.66	23.44	23.22
15.0500	23.00	22.78	22.58	22.37	22.16
15.1750	21.95	21.76	21.57	21.37	21.18
15.3000	20.99	20.81	20.62	20.43	20.26
15.4250	20.09	19.91	19.74	19.58	19.42
15.5500	19.25	19.07	18.91	18.76	18.60
15.6750	18.44	18.30	18.15	18.00	17.84
15.8000	17.70	17.56	17.41	17.27	17.13
15.9250	17.00	16.85	16.71	16.58	16.45
16.0500	16.32	16.20	16.08	15.97	15.85
16.1750	15.74	15.63	15.52	15.41	15.31
16.3000	15.20	15.10	15.00	14.90	14.80
16.4250	14.70	14.61	14.51	14.43	14.34
16.5500	14.25	14.16	14.07	13.99	13.90
16.6750	13.82	13.74	13.66	13.58	13.49
16.8000	13.42	13.34	13.26	13.19	13.11
16.9250	13.04	12.97	12.89	12.82	12.75
17.0500	12.68	12.62	12.55	12.49	12.42
17.1750	12.35	12.29	12.23	12.16	12.10

HYDROGRAPH ORDINATES (cfs)
Output Time increment = .0250 hrs
Time on left represents time for first value in each row.

Time hrs					
17.3000	12.04	11.98	11.92	11.86	11.80
17.4250	11.74	11.68	11.62	11.57	11.51
17.5500	11.45	11.40	11.34	11.29	11.23
17.6750	11.18	11.13	11.08	11.02	10.97
17.8000	10.92	10.87	10.82	10.77	10.73
17.9250	10.68	10.63	10.58	10.53	10.49
18.0500	10.44	10.39	10.35	10.31	10.26
18.1750	10.21	10.17	10.12	10.08	10.03
18.3000	9.99	9.95	9.90	9.86	9.82
18.4250	9.78	9.73	9.69	9.65	9.61
18.5500	9.57	9.52	9.48	9.44	9.40
18.6750	9.36	9.32	9.29	9.25	9.21
18.8000	9.17	9.13	9.10	9.06	9.02
18.9250	8.99	8.95	8.91	8.87	8.84
19.0500	8.80	8.77	8.73	8.70	8.66
19.1750	8.62	8.59	8.55	8.52	8.48
19.3000	8.45	8.42	8.38	8.34	8.31
19.4250	8.28	8.24	8.21	8.17	8.14
19.5500	8.10	8.07	8.03	8.00	7.97
19.6750	7.94	7.90	7.87	7.84	7.80
19.8000	7.77	7.74	7.70	7.67	7.64
19.9250	7.61	7.58	7.54	7.51	7.49
20.0500	7.46	7.43	7.40	7.38	7.35
20.1750	7.33	7.30	7.28	7.25	7.23
20.3000	7.21	7.19	7.16	7.14	7.12
20.4250	7.09	7.07	7.05	7.03	7.01
20.5500	6.99	6.97	6.95	6.93	6.91
20.6750	6.89	6.87	6.85	6.83	6.81
20.8000	6.79	6.77	6.75	6.74	6.72
20.9250	6.70	6.68	6.66	6.65	6.63
21.0500	6.61	6.60	6.58	6.56	6.55
21.1750	6.53	6.51	6.50	6.48	6.47
21.3000	6.45	6.44	6.42	6.40	6.39
21.4250	6.37	6.36	6.34	6.33	6.32
21.5500	6.30	6.28	6.27	6.26	6.24
21.6750	6.23	6.22	6.21	6.19	6.18
21.8000	6.17	6.15	6.14	6.13	6.12
21.9250	6.11	6.10	6.08	6.07	6.06
22.0500	6.05	6.04	6.03	6.02	6.00
22.1750	5.99	5.98	5.97	5.96	5.95
22.3000	5.94	5.93	5.92	5.90	5.89
22.4250	5.88	5.87	5.86	5.86	5.85
22.5500	5.83	5.82	5.81	5.80	5.79
22.6750	5.78	5.78	5.77	5.75	5.74
22.8000	5.73	5.72	5.72	5.71	5.70
22.9250	5.69	5.68	5.67	5.66	5.65
23.0500	5.64	5.63	5.63	5.62	5.61

HYDROGRAPH ORDINATES (cfs)
Output Time increment = .0250 hrs
Time on left represents time for first value in each row.

Time hrs					
23.1750	5.60	5.59	5.58	5.57	5.56
23.3000	5.56	5.55	5.54	5.53	5.52
23.4250	5.51	5.50	5.49	5.49	5.48
23.5500	5.47	5.46	5.45	5.44	5.44
23.6750	5.43	5.42	5.41	5.40	5.39
23.8000	5.39	5.38	5.37	5.37	5.36
23.9250	5.35	5.34	5.33	5.32	5.22
24.0500	4.87	4.50	4.26	4.12	4.03
24.1750	3.96	3.90	3.84	3.79	3.75
24.3000	3.70	3.66	3.62	3.58	3.53
24.4250	3.49	3.45	3.41	3.37	3.34
24.5500	3.30	3.26	3.22	3.18	3.15
24.6750	3.11	3.08	3.04	3.00	2.97
24.8000	2.94	2.90	2.87	2.84	2.80
24.9250	2.77	2.74	2.71	2.68	2.65
25.0500	2.62	2.60	2.57	2.54	2.52
25.1750	2.49	2.47	2.44	2.42	2.39
25.3000	2.37	2.34	2.32	2.30	2.27
25.4250	2.25	2.23	2.20	2.18	2.16
25.5500	2.14	2.11	2.09	2.07	2.05
25.6750	2.03	2.01	1.99	1.97	1.95
25.8000	1.93	1.91	1.89	1.87	1.85
25.9250	1.83	1.81	1.79	1.78	1.76
26.0500	1.74	1.73	1.71	1.70	1.68
26.1750	1.67	1.65	1.64	1.62	1.61
26.3000	1.60	1.58	1.57	1.56	1.54
26.4250	1.53	1.52	1.50	1.49	1.48
26.5500	1.46	1.45	1.44	1.43	1.41
26.6750	1.40	1.39	1.38	1.36	1.35
26.8000	1.34	1.33	1.32	1.31	1.29
26.9250	1.28	1.27	1.26	1.25	1.24
27.0500	1.23	1.22	1.21	1.20	1.19
27.1750	1.18	1.17	1.16	1.15	1.14
27.3000	1.13	1.12	1.11	1.10	1.09
27.4250	1.08	1.07	1.06	1.05	1.04
27.5500	1.03	1.02	1.01	1.01	1.00
27.6750	.99	.98	.97	.96	.95
27.8000	.95	.94	.94	.93	.92
27.9250	.92	.91	.90	.90	.89
28.0500	.89	.88	.87	.87	.86
28.1750	.86	.85	.84	.84	.83
28.3000	.83	.82	.82	.81	.81
28.4250	.80	.79	.79	.78	.78
28.5500	.77	.77	.76	.76	.75
28.6750	.75	.74	.74	.73	.73
28.8000	.72	.72	.71	.71	.70
28.9250	.70	.69	.69	.68	.68

HYDROGRAPH ORDINATES (cfs)
Output Time increment = .0250 hrs
Time on left represents time for first value in each row.

Time hrs					
29.0500	.68	.67	.67	.66	.66
29.1750	.65	.65	.64	.64	.64
29.3000	.63	.63	.62	.62	.61
29.4250	.61	.61	.60	.60	.59
29.5500	.59	.59	.58	.58	.57
29.6750	.57	.57	.56	.56	.56
29.8000	.55	.55	.54	.54	.54
29.9250	.53	.53	.53	.52	.52
30.0500	.52	.51	.51	.50	.50
30.1750	.50	.49	.49	.49	.48
30.3000	.48	.48	.48	.47	.47
30.4250	.47	.46	.46	.46	.45
30.5500	.45	.45	.44	.44	.44
30.6750	.44	.43	.43	.43	.42
30.8000	.42	.42	.41	.41	.41
30.9250	.41	.40	.40	.40	.40
31.0500	.39	.39	.39	.39	.38
31.1750	.38	.38	.37	.37	.37
31.3000	.37	.36	.36	.36	.36
31.4250	.36	.35	.35	.35	.35
31.5500	.34	.34	.34	.34	.34
31.6750	.33	.33	.33	.33	.33
31.8000	.33	.33	.33	.32	.32
31.9250	.32	.32	.32	.32	.32
32.0500	.32	.32	.31	.31	.31
32.1750	.31	.31	.31	.31	.31
32.3000	.30	.30	.30	.30	.30
32.4250	.30	.30	.30	.30	.29
32.5500	.29	.29	.29	.29	.29
32.6750	.29	.29	.29	.28	.28
32.8000	.28	.28	.28	.28	.28
32.9250	.28	.28	.28	.27	.27
33.0500	.27	.27	.27	.27	.27
33.1750	.27	.27	.27	.26	.26
33.3000	.26	.26	.26	.26	.26
33.4250	.26	.26	.26	.25	.25
33.5500	.25	.25	.25	.25	.25
33.6750	.25	.25	.25	.25	.24
33.8000	.24	.24	.24	.24	.24
33.9250	.24	.24	.24	.24	.24
34.0500	.23	.23	.23	.23	.23
34.1750	.23	.23	.23	.23	.23
34.3000	.23	.23	.22	.22	.22
34.4250	.22	.22	.22	.22	.22
34.5500	.22	.22	.22	.22	.21
34.6750	.21	.21	.21	.21	.21
34.8000	.21	.21	.21	.21	.21

HYDROGRAPH ORDINATES (cfs)
Output Time increment = .0250 hrs
Time on left represents time for first value in each row.

Time hrs					
34.9250	.21	.21	.20	.20	.20
35.0500	.20	.20	.20	.20	.20
35.1750	.20	.20	.20	.20	.20
35.3000	.19	.19	.19	.19	.19
35.4250	.19	.19	.19	.19	.19
35.5500	.19	.19	.19	.19	.18
35.6750	.18	.18	.18	.18	.18
35.8000	.18	.18	.18	.18	.18
35.9250	.18	.18	.18	.18	.17
36.0500	.17	.17	.17	.17	.17
36.1750	.17	.17	.17	.17	.17
36.3000	.17	.17	.17	.17	.17
36.4250	.16	.16	.16	.16	.16
36.5500	.16	.16	.16	.16	.16
36.6750	.16	.16	.16	.16	.16
36.8000	.16	.16	.15	.15	.15
36.9250	.15	.15	.15	.15	.15
37.0500	.15	.15	.15	.15	.15
37.1750	.15	.15	.15	.15	.15
37.3000	.14	.14	.14	.14	.14
37.4250	.14	.14	.14	.14	.14
37.5500	.14	.14	.14	.14	.14
37.6750	.14	.14	.14	.14	.13
37.8000	.13	.13	.13	.13	.13
37.9250	.13	.13	.13	.13	.13
38.0500	.13	.13	.13	.13	.13
38.1750	.13	.13	.13	.13	.13
38.3000	.12	.12	.12	.12	.12
38.4250	.12	.12	.12	.12	.12
38.5500	.12	.12	.12	.12	.12
38.6750	.12	.12	.12	.12	.12
38.8000	.12	.12	.11	.11	.11
38.9250	.11	.11	.11	.11	.11
39.0500	.11	.11	.11	.11	.11
39.1750	.11	.11	.11	.11	.11
39.3000	.11	.11	.11	.11	.11
39.4250	.11	.11	.10	.10	.10
39.5500	.10	.10	.10	.10	.10
39.6750	.10	.10	.10	.10	.10
39.8000	.10	.10	.10	.10	.10
39.9250	.10	.10	.10	.10	.10
40.0500	.10	.10	.10	.09	.09
40.1750	.09	.09	.09	.09	.09
40.3000	.09	.09	.09	.09	.09
40.4250	.09	.09	.09	.09	.09
40.5500	.09	.09	.09	.09	.09
40.6750	.09	.09	.09	.09	.09

HYDROGRAPH ORDINATES (cfs)
Output Time increment = .0250 hrs
Time on left represents time for first value in each row.

Time hrs					
40.8000	.09	.09	.09	.08	.08
40.9250	.08	.08	.08	.08	.08
41.0500	.08	.08	.08	.08	.08
41.1750	.08	.08	.08	.08	.08
41.3000	.08	.08	.08	.08	.08
41.4250	.08	.08	.08	.08	.08
41.5500	.08	.08	.08	.08	.08
41.6750	.08	.08	.07	.07	.07
41.8000	.07	.07	.07	.07	.07
41.9250	.07	.07	.07	.07	.07
42.0500	.07	.07	.07	.07	.07
42.1750	.07	.07	.07	.07	.07
42.3000	.07	.07	.07	.07	.07
42.4250	.07	.07	.07	.07	.07
42.5500	.07	.07	.07	.07	.07
42.6750	.06	.06	.06	.06	.06
42.8000	.06	.06	.06	.06	.06
42.9250	.06	.06	.06	.06	.06
43.0500	.06	.06	.06	.06	.06
43.1750	.06	.06	.06	.06	.06
43.3000	.06	.06	.06	.06	.06
43.4250	.06	.06	.06	.06	.06
43.5500	.06	.06	.06	.06	.06
43.6750	.06	.06	.06	.06	.06
43.8000	.05	.05	.05	.05	.05
43.9250	.05	.05	.05	.05	.05
44.0500	.05	.05	.05	.05	.05
44.1750	.05	.05	.05	.05	.05
44.3000	.05	.05	.05	.05	.05
44.4250	.05	.05	.05	.05	.05
44.5500	.05	.05	.05	.05	.05
44.6750	.05	.05	.05	.05	.05
44.8000	.05	.05	.05	.05	.05
44.9250	.05	.05	.05	.05	.05
45.0500	.05	.05	.05	.05	.04
45.1750	.04	.04	.04	.04	.04
45.3000	.04	.04	.04	.04	.04
45.4250	.04	.04	.04	.04	.04
45.5500	.04	.04	.04	.04	.04
45.6750	.04	.04	.04	.04	.04
45.8000	.04	.04	.04	.04	.04
45.9250	.04	.04	.04	.04	.04
46.0500	.04	.04	.04	.04	.04
46.1750	.04	.04	.04	.04	.04
46.3000	.04	.04	.04	.04	.04
46.4250	.04	.04	.04	.04	.04
46.5500	.04	.04	.04	.04	.04

HYDROGRAPH ORDINATES (cfs)
Output Time increment = .0250 hrs
Time on left represents time for first value in each row.

Time hrs					
46.6750	.04	.04	.04	.04	.04
46.8000	.04	.04	.03	.03	.03
46.9250	.03	.03	.03	.03	.03
47.0500	.03	.03	.03	.03	.03
47.1750	.03	.03	.03	.03	.03
47.3000	.03	.03	.03	.03	.03
47.4250	.03	.03	.03	.03	.03
47.5500	.03	.03	.03	.03	.03
47.6750	.03	.03	.03	.03	.03
47.8000	.03	.03	.03	.03	.03
47.9250	.03	.03	.03	.03	.03
48.0500	.03	.03	.03	.03	.03
48.1750	.03	.03	.03	.03	.03
48.3000	.03	.03	.03	.03	.03
48.4250	.03	.03	.03	.03	.03
48.5500	.03	.03	.03	.03	.03
48.6750	.03	.03	.03	.03	.03
48.8000	.03	.03	.03	.03	.03
48.9250	.03	.03	.03	.03	.03
49.0500	.03	.03	.02	.02	.02
49.1750	.02	.02	.02	.02	.02
49.3000	.02	.02	.02	.02	.02
49.4250	.02	.02	.02	.02	.02
49.5500	.02	.02	.02	.02	.02
49.6750	.02	.02	.02	.02	.02
49.8000	.02	.02	.02	.02	.02
49.9250	.02	.02	.02	.02	.02
50.0500	.02	.02	.02	.02	.02
50.1750	.02	.02	.02	.02	.02
50.3000	.02	.02	.02	.02	.02
50.4250	.02	.02	.02	.02	.02
50.5500	.02	.02	.02	.02	.02
50.6750	.02	.02	.02	.02	.02
50.8000	.02	.02	.02	.02	.02
50.9250	.02	.02	.02	.02	.02
51.0500	.02	.02	.02	.02	.02
51.1750	.02	.02	.02	.02	.02
51.3000	.02	.02	.02	.02	.02
51.4250	.02	.02	.02	.02	.02
51.5500	.02	.02	.02	.02	.02
51.6750	.02	.02	.02	.02	

SUMMARY FOR HYDROGRAPH ADDITION
at Node: OUTFALL TO CREEK

HYG Directory: C:\Haestad\PPKW\Job Files\ProgressPoint-PhaseII_200-2180-20\R\

Upstream Link ID	Upstream Node ID	HYG file	HYG ID	HYG tag
ROUTE-BYPASS-WES	1_BYPASS-WEST	work_pad.hyg	1_BYPASS-WEST	100
ROUTE-BYPASS-NOR	3_BYPASS-NORTH	work_pad.hyg	3_BYPASS-NORTH	100
ROUTE-BYPASS-EAS	2_BYPASS-EAST	work_pad.hyg	2_BYPASS-EAST	100
BASIN 2 OUTLET	BASIN 2 IN	work_pad.hyg	BASIN 2 OUTLET	100

INFLOWS TO: OUTFALL TO CREEK

HYG file	HYG ID	HYG tag	Volume ac-ft	Peak Time hrs	Peak Flow cfs
work_pad.hyg	1_BYPASS-WEST	100	5.611	11.9250	92.48
work_pad.hyg	3_BYPASS-NORTH	100	1.122	11.9250	18.55
work_pad.hyg	2_BYPASS-EAST	100	3.647	11.9250	60.11
work_pad.hyg	BASIN 2 OUTLET	100	32.788	12.0500	260.65

TOTAL FLOW INTO: OUTFALL TO CREEK

HYG file	HYG ID	HYG tag	Volume ac-ft	Peak Time hrs	Peak Flow cfs
work_pad.hyg	OUTFALL TO CREEK	100	43.169	12.0250	369.34

TOTAL NODE INFLOW...
HYG file = C:\Haestad\PPKW\Job Files\ProgressPoint-PhaseII_200-2180-20\R\work_pad.hyg
HYG ID = OUTFALL TO CREEK
HYG Tag = 100

Peak Discharge =	369.34 cfs
Time to Peak =	12.0250 hrs
HYG Volume =	43.169 ac-ft

HYDROGRAPH ORDINATES (cfs)
Output Time increment = .0250 hrs
Time on left represents time for first value in each row.

Time hrs					
1.1250	.00	.00	.01	.02	.04
1.2500	.05	.06	.08	.09	.10
1.3750	.12	.13	.14	.16	.17
1.5000	.19	.20	.21	.23	.24
1.6250	.25	.27	.28	.29	.31
1.7500	.32	.33	.35	.36	.38
1.8750	.39	.41	.42	.43	.45
2.0000	.46	.47	.49	.51	.52
2.1250	.53	.55	.56	.57	.59
2.2500	.61	.62	.64	.65	.67
2.3750	.68	.69	.71	.72	.74
2.5000	.76	.77	.79	.80	.81
2.6250	.83	.85	.86	.88	.89
2.7500	.91	.92	.94	.95	.97
2.8750	.99	1.00	1.02	1.03	1.05
3.0000	1.06	1.08	1.09	1.11	1.13
3.1250	1.15	1.16	1.17	1.19	1.20
3.2500	1.22	1.24	1.26	1.27	1.29
3.3750	1.31	1.33	1.36	1.38	1.41
3.5000	1.43	1.45	1.47	1.50	1.52
3.6250	1.54	1.57	1.59	1.62	1.64
3.7500	1.66	1.68	1.70	1.73	1.75
3.8750	1.78	1.80	1.83	1.85	1.87
4.0000	1.89	1.92	1.94	1.97	1.99
4.1250	2.02	2.04	2.07	2.10	2.12
4.2500	2.15	2.18	2.20	2.23	2.26
4.3750	2.30	2.33	2.36	2.39	2.42
4.5000	2.45	2.49	2.52	2.55	2.58
4.6250	2.62	2.65	2.68	2.71	2.75
4.7500	2.78	2.81	2.85	2.88	2.91
4.8750	2.95	2.98	3.01	3.04	3.08
5.0000	3.11	3.14	3.18	3.21	3.24
5.1250	3.28	3.31	3.35	3.38	3.42

HYDROGRAPH ORDINATES (cfs)
Output Time increment = .0250 hrs
Time on left represents time for first value in each row.

Time hrs					
5.2500	3.46	3.50	3.53	3.57	3.61
5.3750	3.65	3.69	3.72	3.76	3.80
5.5000	3.84	3.87	3.91	3.95	3.99
5.6250	4.03	4.07	4.11	4.14	4.18
5.7500	4.22	4.26	4.30	4.33	4.37
5.8750	4.41	4.45	4.48	4.52	4.56
6.0000	4.60	4.64	4.68	4.73	4.77
6.1250	4.81	4.85	4.89	4.93	4.97
6.2500	5.02	5.06	5.10	5.14	5.18
6.3750	5.22	5.26	5.30	5.35	5.39
6.5000	5.43	5.47	5.51	5.55	5.59
6.6250	5.63	5.67	5.71	5.75	5.79
6.7500	5.83	5.88	5.92	5.95	6.00
6.8750	6.04	6.09	6.13	6.17	6.22
7.0000	6.26	6.30	6.35	6.39	6.43
7.1250	6.47	6.52	6.56	6.60	6.64
7.2500	6.69	6.73	6.77	6.81	6.85
7.3750	6.90	6.94	6.98	7.02	7.06
7.5000	7.10	7.14	7.19	7.23	7.27
7.6250	7.31	7.35	7.40	7.43	7.48
7.7500	7.52	7.57	7.61	7.65	7.69
7.8750	7.74	7.78	7.82	7.87	7.91
8.0000	7.95	8.00	8.05	8.11	8.16
8.1250	8.22	8.29	8.37	8.43	8.49
8.2500	8.58	8.66	8.72	8.79	8.87
8.3750	8.96	9.03	9.10	9.19	9.27
8.5000	9.35	9.42	9.51	9.61	9.69
8.6250	9.77	9.86	9.96	10.04	10.13
8.7500	10.23	10.33	10.41	10.50	10.60
8.8750	10.71	10.79	10.88	10.99	11.10
9.0000	11.19	11.27	11.36	11.45	11.53
9.1250	11.61	11.68	11.76	11.83	11.90
9.2500	11.96	12.03	12.10	12.16	12.23
9.3750	12.29	12.36	12.42	12.48	12.54
9.5000	12.60	12.67	12.76	12.85	12.93
9.6250	13.02	13.14	13.27	13.37	13.47
9.7500	13.61	13.75	13.86	13.97	14.12
9.8750	14.26	14.38	14.50	14.65	14.80
10.0000	14.92	15.05	15.22	15.40	15.54
10.1250	15.68	15.88	16.08	16.24	16.41
10.2500	16.62	16.83	17.01	17.18	17.40
10.3750	17.63	17.81	17.99	18.23	18.46
10.5000	18.65	18.86	19.13	19.41	19.64
10.6250	19.88	20.20	20.53	20.80	21.06
10.7500	21.41	21.76	22.05	22.34	22.71
10.8750	23.08	23.39	23.70	24.09	24.48
11.0000	24.80	25.17	25.68	26.22	26.64

HYDROGRAPH ORDINATES (cfs)
Output Time increment = .0250 hrs
Time on left represents time for first value in each row.

Time hrs					
11.1250	27.10	27.78	28.47	29.03	29.58
11.2500	30.33	31.10	31.71	32.32	33.14
11.3750	33.97	34.64	35.31	36.18	37.07
11.5000	37.85	39.95	45.30	51.21	55.41
11.6250	61.06	72.50	84.84	93.75	103.52
11.7500	120.06	137.56	150.97	168.48	201.43
11.8750	237.14	263.85	285.35	310.93	333.78
12.0000	357.15	369.34	351.43	317.22	285.96
12.1250	260.22	238.15	219.45	203.88	190.58
12.2500	178.55	167.91	158.91	151.12	143.57
12.3750	136.87	131.19	126.23	121.55	117.44
12.5000	114.57	112.44	110.08	107.76	105.71
12.6250	103.82	101.90	100.05	98.34	96.68
12.7500	94.95	93.26	91.69	90.16	88.56
12.8750	86.98	85.53	84.11	82.61	81.14
13.0000	79.79	78.48	77.13	75.80	74.57
13.1250	73.39	72.18	71.01	69.90	68.83
13.2500	67.73	66.64	65.63	64.64	63.62
13.3750	62.62	61.68	60.77	59.82	58.89
13.5000	58.02	57.18	56.31	55.46	54.66
13.6250	53.89	53.10	52.32	51.60	50.89
13.7500	50.15	49.43	48.76	48.10	47.41
13.8750	46.74	46.12	45.50	44.86	44.23
14.0000	43.65	43.08	42.51	41.95	41.42
14.1250	40.91	40.40	39.90	39.43	38.97
14.2500	38.51	38.06	37.63	37.21	36.78
14.3750	36.36	35.97	35.58	35.19	34.80
14.5000	34.44	34.09	33.72	33.36	33.02
14.6250	32.69	32.35	32.02	31.71	31.41
14.7500	31.09	30.77	30.48	30.19	29.90
14.8750	29.61	29.35	29.08	28.80	28.52
15.0000	28.26	28.01	27.75	27.50	27.27
15.1250	27.03	26.79	26.54	26.31	26.09
15.2500	25.86	25.63	25.42	25.21	24.99
15.3750	24.77	24.57	24.37	24.16	23.96
15.5000	23.77	23.58	23.38	23.17	22.99
15.6250	22.81	22.63	22.44	22.27	22.10
15.7500	21.92	21.73	21.56	21.40	21.22
15.8750	21.05	20.89	20.74	20.57	20.40
16.0000	20.24	20.09	19.94	19.79	19.65
16.1250	19.52	19.38	19.24	19.11	18.98
16.2500	18.86	18.73	18.62	18.50	18.38
16.3750	18.26	18.15	18.04	17.93	17.82
16.5000	17.71	17.61	17.50	17.39	17.29
16.6250	17.19	17.09	16.99	16.89	16.80
16.7500	16.70	16.61	16.52	16.43	16.34
16.8750	16.25	16.17	16.09	16.00	15.91

HYDROGRAPH ORDINATES (cfs)
Output Time increment = .0250 hrs
Time on left represents time for first value in each row.

Time hrs					
17.0000	15.83	15.75	15.66	15.58	15.51
17.1250	15.43	15.35	15.26	15.19	15.12
17.2500	15.04	14.96	14.90	14.83	14.75
17.3750	14.68	14.61	14.55	14.48	14.41
17.5000	14.35	14.28	14.21	14.14	14.08
17.6250	14.02	13.95	13.89	13.83	13.77
17.7500	13.70	13.64	13.58	13.52	13.46
17.8750	13.40	13.34	13.29	13.22	13.16
18.0000	13.11	13.05	13.00	12.94	12.89
18.1250	12.84	12.78	12.73	12.67	12.62
18.2500	12.57	12.52	12.47	12.42	12.36
18.3750	12.31	12.26	12.21	12.16	12.11
18.5000	12.06	12.02	11.96	11.91	11.86
18.6250	11.82	11.77	11.72	11.67	11.63
18.7500	11.58	11.52	11.48	11.43	11.39
18.8750	11.34	11.30	11.25	11.20	11.16
19.0000	11.11	11.07	11.03	10.98	10.94
19.1250	10.90	10.85	10.81	10.77	10.73
19.2500	10.68	10.64	10.60	10.56	10.51
19.3750	10.47	10.43	10.39	10.34	10.30
19.5000	10.26	10.23	10.18	10.13	10.09
19.6250	10.06	10.01	9.97	9.93	9.90
19.7500	9.85	9.81	9.77	9.73	9.69
19.8750	9.65	9.61	9.57	9.53	9.48
20.0000	9.45	9.41	9.37	9.34	9.31
20.1250	9.28	9.24	9.21	9.18	9.15
20.2500	9.12	9.10	9.07	9.04	9.01
20.3750	8.98	8.96	8.93	8.90	8.88
20.5000	8.85	8.83	8.80	8.77	8.75
20.6250	8.72	8.70	8.68	8.66	8.63
20.7500	8.61	8.58	8.56	8.54	8.52
20.8750	8.49	8.47	8.45	8.43	8.41
21.0000	8.38	8.36	8.34	8.32	8.31
21.1250	8.29	8.26	8.24	8.22	8.20
21.2500	8.19	8.17	8.15	8.13	8.11
21.3750	8.09	8.07	8.05	8.04	8.02
21.5000	8.01	7.99	7.97	7.95	7.93
21.6250	7.92	7.90	7.89	7.87	7.86
21.7500	7.84	7.82	7.81	7.79	7.78
21.8750	7.77	7.75	7.74	7.72	7.71
22.0000	7.69	7.68	7.66	7.65	7.64
22.1250	7.63	7.61	7.60	7.58	7.57
22.2500	7.56	7.54	7.53	7.52	7.51
22.3750	7.49	7.48	7.46	7.45	7.44
22.5000	7.43	7.42	7.41	7.39	7.38
22.6250	7.37	7.36	7.34	7.33	7.32
22.7500	7.31	7.30	7.28	7.27	7.26

HYDROGRAPH ORDINATES (cfs)
Output Time increment = .0250 hrs
Time on left represents time for first value in each row.

Time hrs					
22.8750	7.25	7.24	7.23	7.22	7.20
23.0000	7.19	7.18	7.17	7.16	7.15
23.1250	7.14	7.13	7.12	7.11	7.10
23.2500	7.09	7.08	7.07	7.06	7.05
23.3750	7.03	7.02	7.01	7.00	6.99
23.5000	6.99	6.98	6.96	6.95	6.94
23.6250	6.93	6.92	6.91	6.91	6.90
23.7500	6.88	6.87	6.86	6.85	6.84
23.8750	6.84	6.83	6.82	6.81	6.80
24.0000	6.78	6.65	6.20	5.72	5.41
24.1250	5.22	5.10	5.00	4.93	4.86
24.2500	4.79	4.73	4.67	4.61	4.56
24.3750	4.50	4.44	4.38	4.33	4.27
24.5000	4.22	4.17	4.11	4.06	4.01
24.6250	3.96	3.91	3.86	3.81	3.76
24.7500	3.72	3.68	3.63	3.59	3.55
24.8750	3.51	3.47	3.43	3.39	3.35
25.0000	3.31	3.27	3.24	3.20	3.16
25.1250	3.13	3.09	3.05	3.02	2.98
25.2500	2.95	2.92	2.88	2.85	2.82
25.3750	2.78	2.75	2.72	2.69	2.66
25.5000	2.64	2.61	2.58	2.56	2.53
25.6250	2.50	2.48	2.45	2.43	2.40
25.7500	2.38	2.35	2.33	2.31	2.28
25.8750	2.26	2.24	2.21	2.19	2.17
26.0000	2.15	2.12	2.10	2.08	2.06
26.1250	2.04	2.02	2.00	1.98	1.96
26.2500	1.94	1.92	1.90	1.88	1.86
26.3750	1.84	1.82	1.80	1.78	1.77
26.5000	1.75	1.73	1.72	1.70	1.69
26.6250	1.67	1.66	1.64	1.63	1.62
26.7500	1.60	1.59	1.57	1.56	1.55
26.8750	1.53	1.52	1.51	1.49	1.48
27.0000	1.47	1.46	1.44	1.43	1.42
27.1250	1.41	1.39	1.38	1.37	1.36
27.2500	1.35	1.33	1.32	1.31	1.30
27.3750	1.29	1.28	1.27	1.25	1.24
27.5000	1.23	1.22	1.21	1.20	1.19
27.6250	1.18	1.17	1.16	1.15	1.14
27.7500	1.13	1.12	1.11	1.10	1.09
27.8750	1.08	1.07	1.06	1.05	1.04
28.0000	1.04	1.03	1.02	1.01	1.00
28.1250	.99	.98	.97	.97	.96
28.2500	.95	.94	.94	.93	.93
28.3750	.92	.91	.91	.90	.89
28.5000	.89	.88	.88	.87	.86
28.6250	.86	.85	.85	.84	.84

HYDROGRAPH ORDINATES (cfs)
Output Time increment = .0250 hrs
Time on left represents time for first value in each row.

Time hrs					
28.7500	.83	.82	.82	.81	.81
28.8750	.80	.80	.79	.79	.78
29.0000	.78	.77	.77	.76	.76
29.1250	.75	.74	.74	.73	.73
29.2500	.72	.72	.72	.71	.71
29.3750	.70	.70	.69	.69	.68
29.5000	.68	.67	.67	.66	.66
29.6250	.65	.65	.65	.64	.64
29.7500	.63	.63	.62	.62	.62
29.8750	.61	.61	.60	.60	.60
30.0000	.59	.59	.58	.58	.58
30.1250	.57	.57	.56	.56	.56
30.2500	.55	.55	.55	.54	.54
30.3750	.53	.53	.53	.52	.52
30.5000	.52	.51	.51	.51	.50
30.6250	.50	.50	.49	.49	.49
30.7500	.48	.48	.48	.47	.47
30.8750	.47	.46	.46	.46	.45
31.0000	.45	.45	.45	.44	.44
31.1250	.44	.43	.43	.43	.42
31.2500	.42	.42	.42	.41	.41
31.3750	.41	.40	.40	.40	.40
31.5000	.39	.39	.39	.39	.38
31.6250	.38	.38	.38	.37	.37
31.7500	.37	.37	.36	.36	.36
31.8750	.36	.35	.35	.35	.35
32.0000	.34	.34	.34	.34	.34
32.1250	.33	.33	.33	.33	.33
32.2500	.33	.33	.33	.33	.32
32.3750	.32	.32	.32	.32	.32
32.5000	.32	.32	.31	.31	.31
32.6250	.31	.31	.31	.31	.31
32.7500	.31	.30	.30	.30	.30
32.8750	.30	.30	.30	.30	.30
33.0000	.29	.29	.29	.29	.29
33.1250	.29	.29	.29	.29	.28
33.2500	.28	.28	.28	.28	.28
33.3750	.28	.28	.28	.27	.27
33.5000	.27	.27	.27	.27	.27
33.6250	.27	.27	.27	.26	.26
33.7500	.26	.26	.26	.26	.26
33.8750	.26	.26	.26	.26	.25
34.0000	.25	.25	.25	.25	.25
34.1250	.25	.25	.25	.25	.24
34.2500	.24	.24	.24	.24	.24
34.3750	.24	.24	.24	.24	.24
34.5000	.24	.23	.23	.23	.23

HYDROGRAPH ORDINATES (cfs)
Output Time increment = .0250 hrs
Time on left represents time for first value in each row.

Time hrs					
34.6250	.23	.23	.23	.23	.23
34.7500	.23	.23	.22	.22	.22
34.8750	.22	.22	.22	.22	.22
35.0000	.22	.22	.22	.22	.21
35.1250	.21	.21	.21	.21	.21
35.2500	.21	.21	.21	.21	.21
35.3750	.21	.21	.20	.20	.20
35.5000	.20	.20	.20	.20	.20
35.6250	.20	.20	.20	.20	.20
35.7500	.20	.19	.19	.19	.19
35.8750	.19	.19	.19	.19	.19
36.0000	.19	.19	.19	.19	.19
36.1250	.18	.18	.18	.18	.18
36.2500	.18	.18	.18	.18	.18
36.3750	.18	.18	.18	.18	.18
36.5000	.17	.17	.17	.17	.17
36.6250	.17	.17	.17	.17	.17
36.7500	.17	.17	.17	.17	.17
36.8750	.17	.16	.16	.16	.16
37.0000	.16	.16	.16	.16	.16
37.1250	.16	.16	.16	.16	.16
37.2500	.16	.16	.15	.15	.15
37.3750	.15	.15	.15	.15	.15
37.5000	.15	.15	.15	.15	.15
37.6250	.15	.15	.15	.15	.15
37.7500	.14	.14	.14	.14	.14
37.8750	.14	.14	.14	.14	.14
38.0000	.14	.14	.14	.14	.14
38.1250	.14	.14	.14	.14	.13
38.2500	.13	.13	.13	.13	.13
38.3750	.13	.13	.13	.13	.13
38.5000	.13	.13	.13	.13	.13
38.6250	.13	.13	.13	.13	.13
38.7500	.12	.12	.12	.12	.12
38.8750	.12	.12	.12	.12	.12
39.0000	.12	.12	.12	.12	.12
39.1250	.12	.12	.12	.12	.12
39.2500	.12	.12	.12	.11	.11
39.3750	.11	.11	.11	.11	.11
39.5000	.11	.11	.11	.11	.11
39.6250	.11	.11	.11	.11	.11
39.7500	.11	.11	.11	.11	.11
39.8750	.11	.11	.10	.10	.10
40.0000	.10	.10	.10	.10	.10
40.1250	.10	.10	.10	.10	.10
40.2500	.10	.10	.10	.10	.10
40.3750	.10	.10	.10	.10	.10

HYDROGRAPH ORDINATES (cfs)
Output Time increment = .0250 hrs
Time on left represents time for first value in each row.

Time hrs					
40.5000	.10	.10	.10	.10	.09
40.6250	.09	.09	.09	.09	.09
40.7500	.09	.09	.09	.09	.09
40.8750	.09	.09	.09	.09	.09
41.0000	.09	.09	.09	.09	.09
41.1250	.09	.09	.09	.09	.09
41.2500	.09	.09	.09	.09	.08
41.3750	.08	.08	.08	.08	.08
41.5000	.08	.08	.08	.08	.08
41.6250	.08	.08	.08	.08	.08
41.7500	.08	.08	.08	.08	.08
41.8750	.08	.08	.08	.08	.08
42.0000	.08	.08	.08	.08	.08
42.1250	.08	.08	.07	.07	.07
42.2500	.07	.07	.07	.07	.07
42.3750	.07	.07	.07	.07	.07
42.5000	.07	.07	.07	.07	.07
42.6250	.07	.07	.07	.07	.07
42.7500	.07	.07	.07	.07	.07
42.8750	.07	.07	.07	.07	.07
43.0000	.07	.07	.07	.07	.07
43.1250	.07	.06	.06	.06	.06
43.2500	.06	.06	.06	.06	.06
43.3750	.06	.06	.06	.06	.06
43.5000	.06	.06	.06	.06	.06
43.6250	.06	.06	.06	.06	.06
43.7500	.06	.06	.06	.06	.06
43.8750	.06	.06	.06	.06	.06
44.0000	.06	.06	.06	.06	.06
44.1250	.06	.06	.06	.06	.06
44.2500	.06	.05	.05	.05	.05
44.3750	.05	.05	.05	.05	.05
44.5000	.05	.05	.05	.05	.05
44.6250	.05	.05	.05	.05	.05
44.7500	.05	.05	.05	.05	.05
44.8750	.05	.05	.05	.05	.05
45.0000	.05	.05	.05	.05	.05
45.1250	.05	.05	.05	.05	.05
45.2500	.05	.05	.05	.05	.05
45.3750	.05	.05	.05	.05	.05
45.5000	.05	.05	.05	.05	.05
45.6250	.04	.04	.04	.04	.04
45.7500	.04	.04	.04	.04	.04
45.8750	.04	.04	.04	.04	.04
46.0000	.04	.04	.04	.04	.04
46.1250	.04	.04	.04	.04	.04
46.2500	.04	.04	.04	.04	.04

HYDROGRAPH ORDINATES (cfs)
Output Time increment = .0250 hrs
Time on left represents time for first value in each row.

Time hrs					
46.3750	.04	.04	.04	.04	.04
46.5000	.04	.04	.04	.04	.04
46.6250	.04	.04	.04	.04	.04
46.7500	.04	.04	.04	.04	.04
46.8750	.04	.04	.04	.04	.04
47.0000	.04	.04	.04	.04	.04
47.1250	.04	.04	.04	.04	.04
47.2500	.04	.04	.03	.03	.03
47.3750	.03	.03	.03	.03	.03
47.5000	.03	.03	.03	.03	.03
47.6250	.03	.03	.03	.03	.03
47.7500	.03	.03	.03	.03	.03
47.8750	.03	.03	.03	.03	.03
48.0000	.03	.03	.03	.03	.03
48.1250	.03	.03	.03	.03	.03
48.2500	.03	.03	.03	.03	.03
48.3750	.03	.03	.03	.03	.03
48.5000	.03	.03	.03	.03	.03
48.6250	.03	.03	.03	.03	.03
48.7500	.03	.03	.03	.03	.03
48.8750	.03	.03	.03	.03	.03
49.0000	.03	.03	.03	.03	.03
49.1250	.03	.03	.03	.03	.03
49.2500	.03	.03	.03	.03	.03
49.3750	.03	.03	.03	.03	.03
49.5000	.03	.03	.02	.02	.02
49.6250	.02	.02	.02	.02	.02
49.7500	.02	.02	.02	.02	.02
49.8750	.02	.02	.02	.02	.02
50.0000	.02	.02	.02	.02	.02
50.1250	.02	.02	.02	.02	.02
50.2500	.02	.02	.02	.02	.02
50.3750	.02	.02	.02	.02	.02
50.5000	.02	.02	.02	.02	.02
50.6250	.02	.02	.02	.02	.02
50.7500	.02	.02	.02	.02	.02
50.8750	.02	.02	.02	.02	.02
51.0000	.02	.02	.02	.02	.02
51.1250	.02	.02	.02	.02	.02
51.2500	.02	.02	.02	.02	.02
51.3750	.02				

File.... C:\Haestad\PPKW\Job Files\ProgressPoint-PhaseII_200-2180-20\R\Q.PPW

POND VOLUME CALCULATIONS

Planimeter scale: 1.00 ft/in

Elevation (ft)	Planimeter (sq.in)	Area (acres)	A1+A2+sqr(A1*A2) (acres)	Volume (ac-ft)	Volume Sum (ac-ft)
531.00	72707.000	1.6691	.0000	.000	.000
532.00	77013.000	1.7680	5.1549	1.718	1.718
533.00	81376.000	1.8681	5.4535	1.818	3.536
535.00	90271.000	2.0723	5.9081	3.939	7.475
537.00	99393.000	2.2817	6.5286	4.352	11.827
538.00	104039.000	2.3884	7.0046	2.335	14.162
539.00	108741.000	2.4964	7.3265	2.442	16.604
541.00	118315.000	2.7161	7.8164	5.211	21.815

POND VOLUME EQUATIONS

* Incremental volume computed by the Conic Method for Reservoir Volumes.

Volume = (1/3) * (EL2-EL1) * (Area1 + Area2 + sq.rt.(Area1*Area2))

where: EL1, EL2 = Lower and upper elevations of the increment
Area1,Area2 = Areas computed for EL1, EL2, respectively
Volume = Incremental volume between EL1 and EL2

REQUESTED POND WS ELEVATIONS:

Min. Elev.= 531.00 ft
Increment = .10 ft
Max. Elev.= 541.00 ft

****
OUTLET CONNECTIVITY
****

---> Forward Flow Only (UpStream to DnStream)
<--- Reverse Flow Only (DnStream to UpStream)
<---> Forward and Reverse Both Allowed

Structure	No.		Outfall	E1, ft	E2, ft
Weir-XY Points	W1	--->	TW	533.000	541.000
Weir-Rectangular	W2	--->	TW	537.500	541.000

TW SETUP, D5 Channel

OUTLET STRUCTURE INPUT DATA

Structure ID = W1
Structure Type = Weir-XY Points

# of Openings = 1
WEIR X-Y GROUND POINTS

X, ft	Elev, ft
10.00	542.00
10.00	533.00
10.50	533.00
10.50	533.00
13.50	533.00
13.50	533.00
14.00	533.00
14.00	542.00

Lowest Elev. = 533.00 ft

Weir Coeff. = 2.670000

Weir TW effects (Use adjustment equation)

Structure ID = W2
Structure Type = Weir-Rectangular

# of Openings = 1
Crest Elev. = 537.50 ft
Weir Length = 26.00 ft
Weir Coeff. = 3.333000

Weir TW effects (Use adjustment equation)

Structure ID = TW
Structure Type = TW SETUP, DS Channel

FREE OUTFALL CONDITIONS SPECIFIED

CONVERGENCE TOLERANCES...
Maximum Iterations= 30
Min. TW tolerance = .01 ft
Max. TW tolerance = .01 ft
Min. HW tolerance = .01 ft
Max. HW tolerance = .01 ft
Min. Q tolerance = .10 cfs
Max. Q tolerance = .10 cfs

File.... C:\Haestad\PPKW\Job Files\ProgressPoint-PhaseII_200-2180-20\R\Q.PPW

RATING TABLE FOR ONE OUTLET TYPE

Structure ID = W1 (Weir-XY Points)

Upstream ID = (Pond Water Surface)
DNstream ID = TW (Pond Outfall)

WS Elev,Device Q	Tail Water	Notes
WS Elev. ft	Q cfs	TW Elev ft	Converge +/-ft	Computation Messages
531.00	.00	Free Outfall	
	E < Y min=533.00		
531.10	.00	Free Outfall	
	E < Y min=533.00		
531.20	.00	Free Outfall	
	E < Y min=533.00		
531.30	.00	Free Outfall	
	E < Y min=533.00		
531.40	.00	Free Outfall	
	E < Y min=533.00		
531.50	.00	Free Outfall	
	E < Y min=533.00		
531.60	.00	Free Outfall	
	E < Y min=533.00		
531.70	.00	Free Outfall	
	E < Y min=533.00		
531.80	.00	Free Outfall	
	E < Y min=533.00		
531.90	.00	Free Outfall	
	E < Y min=533.00		
532.00	.00	Free Outfall	
	E < Y min=533.00		
532.10	.00	Free Outfall	
	E < Y min=533.00		
532.20	.00	Free Outfall	
	E < Y min=533.00		
532.30	.00	Free Outfall	
	E < Y min=533.00		
532.40	.00	Free Outfall	
	E < Y min=533.00		
532.50	.00	Free Outfall	
	E < Y min=533.00		
532.60	.00	Free Outfall	
	E < Y min=533.00		

RATING TABLE FOR ONE OUTLET TYPE

Structure ID = W1 (Weir-XY Points)

Upstream ID = (Pond Water Surface)
DNstream ID = TW (Pond Outfall)

WS Elev,Device Q Tail Water Notes

WS Elev. ft	Q cfs	TW Elev ft	Converge +/-ft	Computation Messages
532.70	.00	Free Outfall		
	E < Y min=533.00			
532.80	.00	Free Outfall		
	E < Y min=533.00			
532.90	.00	Free Outfall		
	E < Y min=533.00			
533.00	.00	Free Outfall		
	E = Y min=533.00			
533.10	.34	Free Outfall		
	Max.H=.10; Max.Htw=free out;; W(ft)=4.00			
533.20	.95	Free Outfall		
	Max.H=.20; Max.Htw=free out;; W(ft)=4.00			
533.30	1.75	Free Outfall		
	Max.H=.30; Max.Htw=free out;; W(ft)=4.00			
533.40	2.70	Free Outfall		
	Max.H=.40; Max.Htw=free out;; W(ft)=4.00			
533.50	3.77	Free Outfall		
	Max.H=.50; Max.Htw=free out;; W(ft)=4.00			
533.60	4.96	Free Outfall		
	Max.H=.60; Max.Htw=free out;; W(ft)=4.00			
533.70	6.25	Free Outfall		
	Max.H=.70; Max.Htw=free out;; W(ft)=4.00			
533.80	7.64	Free Outfall		
	Max.H=.80; Max.Htw=free out;; W(ft)=4.00			
533.90	9.11	Free Outfall		
	Max.H=.90; Max.Htw=free out;; W(ft)=4.00			
534.00	10.67	Free Outfall		
	Max.H=1.00; Max.Htw=free out;; W(ft)=4.00			
534.10	12.32	Free Outfall		
	Max.H=1.10; Max.Htw=free out;; W(ft)=4.00			
534.20	14.03	Free Outfall		
	Max.H=1.20; Max.Htw=free out;; W(ft)=4.00			
534.30	15.82	Free Outfall		
	Max.H=1.30; Max.Htw=free out;; W(ft)=4.00			

RATING TABLE FOR ONE OUTLET TYPE

Structure ID = W1 (Weir-XY Points)

Upstream ID = (Pond Water Surface)
DNstream ID = TW (Pond Outfall)

WS Elev, Device Q		Tail Water		Notes
WS Elev. ft	Q cfs	TW Elev ft	Converge +/-ft	Computation Messages
534.40	17.68	Free Outfall		
	Max.H=1.40; Max.Htw=free out;; W(ft)=4.00			
534.50	19.61	Free Outfall		
	Max.H=1.50; Max.Htw=free out;; W(ft)=4.00			
534.60	21.60	Free Outfall		
	Max.H=1.60; Max.Htw=free out;; W(ft)=4.00			
534.70	23.66	Free Outfall		
	Max.H=1.70; Max.Htw=free out;; W(ft)=4.00			
534.80	25.78	Free Outfall		
	Max.H=1.80; Max.Htw=free out;; W(ft)=4.00			
534.90	27.96	Free Outfall		
	Max.H=1.90; Max.Htw=free out;; W(ft)=4.00			
535.00	30.19	Free Outfall		
	Max.H=2.00; Max.Htw=free out;; W(ft)=4.00			
535.10	32.49	Free Outfall		
	Max.H=2.10; Max.Htw=free out;; W(ft)=4.00			
535.20	34.83	Free Outfall		
	Max.H=2.20; Max.Htw=free out;; W(ft)=4.00			
535.30	37.24	Free Outfall		
	Max.H=2.30; Max.Htw=free out;; W(ft)=4.00			
535.40	39.69	Free Outfall		
	Max.H=2.40; Max.Htw=free out;; W(ft)=4.00			
535.50	42.20	Free Outfall		
	Max.H=2.50; Max.Htw=free out;; W(ft)=4.00			
535.60	44.75	Free Outfall		
	Max.H=2.60; Max.Htw=free out;; W(ft)=4.00			
535.70	47.36	Free Outfall		
	Max.H=2.70; Max.Htw=free out;; W(ft)=4.00			
535.80	50.02	Free Outfall		
	Max.H=2.80; Max.Htw=free out;; W(ft)=4.00			
535.90	52.72	Free Outfall		
	Max.H=2.90; Max.Htw=free out;; W(ft)=4.00			
536.00	55.47	Free Outfall		
	Max.H=3.00; Max.Htw=free out;; W(ft)=4.00			

RATING TABLE FOR ONE OUTLET TYPE

Structure ID = W1 (Weir-XY Points)

Upstream ID = (Pond Water Surface)
DNstream ID = TW (Pond Outfall)

WS Elev,Device Q	Tail Water	Notes

WS Elev. ft	Q cfs	TW Elev ft	Converge +/-ft	Computation Messages
536.10	58.27	Free Outfall		
	Max.H=3.10; Max.Htw=free out;; W(ft)=4.00			
536.20	61.11	Free Outfall		
	Max.H=3.20; Max.Htw=free out;; W(ft)=4.00			
536.30	64.00	Free Outfall		
	Max.H=3.30; Max.Htw=free out;; W(ft)=4.00			
536.40	66.93	Free Outfall		
	Max.H=3.40; Max.Htw=free out;; W(ft)=4.00			
536.50	69.90	Free Outfall		
	Max.H=3.50; Max.Htw=free out;; W(ft)=4.00			
536.60	72.92	Free Outfall		
	Max.H=3.60; Max.Htw=free out;; W(ft)=4.00			
536.70	75.98	Free Outfall		
	Max.H=3.70; Max.Htw=free out;; W(ft)=4.00			
536.80	79.08	Free Outfall		
	Max.H=3.80; Max.Htw=free out;; W(ft)=4.00			
536.90	82.22	Free Outfall		
	Max.H=3.90; Max.Htw=free out;; W(ft)=4.00			
537.00	85.40	Free Outfall		
	Max.H=4.00; Max.Htw=free out;; W(ft)=4.00			
537.10	88.63	Free Outfall		
	Max.H=4.10; Max.Htw=free out;; W(ft)=4.00			
537.20	91.89	Free Outfall		
	Max.H=4.20; Max.Htw=free out;; W(ft)=4.00			
537.30	95.19	Free Outfall		
	Max.H=4.30; Max.Htw=free out;; W(ft)=4.00			
537.40	98.53	Free Outfall		
	Max.H=4.40; Max.Htw=free out;; W(ft)=4.00			
537.50	101.91	Free Outfall		
	Max.H=4.50; Max.Htw=free out;; W(ft)=4.00			
537.60	105.32	Free Outfall		
	Max.H=4.60; Max.Htw=free out;; W(ft)=4.00			
537.70	108.78	Free Outfall		
	Max.H=4.70; Max.Htw=free out;; W(ft)=4.00			

RATING TABLE FOR ONE OUTLET TYPE

Structure ID = W1 (Weir-XY Points)

Upstream ID = (Pond Water Surface)
DNstream ID = TW (Pond Outfall)

WS Elev, ft	Device Q, cfs	Tail Water TW Elev, ft	Converge +/-ft	Notes / Computation Messages
537.80	112.27	Free Outfall		Max.H=4.80; Max.Htw=free out;; W(ft)=4.00
537.90	115.80	Free Outfall		Max.H=4.90; Max.Htw=free out;; W(ft)=4.00
538.00	119.36	Free Outfall		Max.H=5.00; Max.Htw=free out;; W(ft)=4.00
538.10	122.96	Free Outfall		Max.H=5.10; Max.Htw=free out;; W(ft)=4.00
538.20	126.59	Free Outfall		Max.H=5.20; Max.Htw=free out;; W(ft)=4.00
538.30	130.26	Free Outfall		Max.H=5.30; Max.Htw=free out;; W(ft)=4.00
538.40	133.97	Free Outfall		Max.H=5.40; Max.Htw=free out;; W(ft)=4.00
538.50	137.70	Free Outfall		Max.H=5.50; Max.Htw=free out;; W(ft)=4.00
538.60	141.48	Free Outfall		Max.H=5.60; Max.Htw=free out;; W(ft)=4.00
538.70	145.28	Free Outfall		Max.H=5.70; Max.Htw=free out;; W(ft)=4.00
538.80	149.12	Free Outfall		Max.H=5.80; Max.Htw=free out;; W(ft)=4.00
538.90	153.00	Free Outfall		Max.H=5.90; Max.Htw=free out;; W(ft)=4.00
539.00	156.90	Free Outfall		Max.H=6.00; Max.Htw=free out;; W(ft)=4.00
539.10	160.84	Free Outfall		Max.H=6.10; Max.Htw=free out;; W(ft)=4.00
539.20	164.81	Free Outfall		Max.H=6.20; Max.Htw=free out;; W(ft)=4.00
539.30	168.82	Free Outfall		Max.H=6.30; Max.Htw=free out;; W(ft)=4.00
539.40	172.85	Free Outfall		Max.H=6.40; Max.Htw=free out;; W(ft)=4.00

RATING TABLE FOR ONE OUTLET TYPE

Structure ID = W1 (Weir-XY Points)

Upstream ID = (Pond Water Surface)
DNstream ID = TW (Pond Outfall)

WS Elev, ft	Device Q, cfs	Tail Water: TW Elev, ft	Converge +/-ft	Notes: Computation Messages
539.50	176.92	Free Outfall		Max.H=6.50; Max.Htw=free out;; W(ft)=4.00
539.60	181.02	Free Outfall		Max.H=6.60; Max.Htw=free out;; W(ft)=4.00
539.70	185.15	Free Outfall		Max.H=6.70; Max.Htw=free out;; W(ft)=4.00
539.80	189.31	Free Outfall		Max.H=6.80; Max.Htw=free out;; W(ft)=4.00
539.90	193.50	Free Outfall		Max.H=6.90; Max.Htw=free out;; W(ft)=4.00
540.00	197.72	Free Outfall		Max.H=7.00; Max.Htw=free out;; W(ft)=4.00
540.10	201.98	Free Outfall		Max.H=7.10; Max.Htw=free out;; W(ft)=4.00
540.20	206.26	Free Outfall		Max.H=7.20; Max.Htw=free out;; W(ft)=4.00
540.30	210.57	Free Outfall		Max.H=7.30; Max.Htw=free out;; W(ft)=4.00
540.40	214.92	Free Outfall		Max.H=7.40; Max.Htw=free out;; W(ft)=4.00
540.50	219.29	Free Outfall		Max.H=7.50; Max.Htw=free out;; W(ft)=4.00
540.60	223.69	Free Outfall		Max.H=7.60; Max.Htw=free out;; W(ft)=4.00
540.70	228.12	Free Outfall		Max.H=7.70; Max.Htw=free out;; W(ft)=4.00
540.80	232.57	Free Outfall		Max.H=7.80; Max.Htw=free out;; W(ft)=4.00
540.90	237.06	Free Outfall		Max.H=7.90; Max.Htw=free out;; W(ft)=4.00
541.00	241.58	Free Outfall		Max.H=8.00; Max.Htw=free out;; W(ft)=4.00

RATING TABLE FOR ONE OUTLET TYPE

Structure ID = W2 (Weir-Rectangular)

Upstream ID = (Pond Water Surface)
DNstream ID = TW (Pond Outfall)

WS Elev,Device Q		Tail Water		Notes
WS Elev. ft	Q cfs	TW Elev Converge ft	+/-ft	Computation Messages
531.00	.00	Free Outfall		HW & TW below Inv.El.=537.500
531.10	.00	Free Outfall		HW & TW below Inv.El.=537.500
531.20	.00	Free Outfall		HW & TW below Inv.El.=537.500
531.30	.00	Free Outfall		HW & TW below Inv.El.=537.500
531.40	.00	Free Outfall		HW & TW below Inv.El.=537.500
531.50	.00	Free Outfall		HW & TW below Inv.El.=537.500
531.60	.00	Free Outfall		HW & TW below Inv.El.=537.500
531.70	.00	Free Outfall		HW & TW below Inv.El.=537.500
531.80	.00	Free Outfall		HW & TW below Inv.El.=537.500
531.90	.00	Free Outfall		HW & TW below Inv.El.=537.500
532.00	.00	Free Outfall		HW & TW below Inv.El.=537.500
532.10	.00	Free Outfall		HW & TW below Inv.El.=537.500
532.20	.00	Free Outfall		HW & TW below Inv.El.=537.500
532.30	.00	Free Outfall		HW & TW below Inv.El.=537.500
532.40	.00	Free Outfall		HW & TW below Inv.El.=537.500
532.50	.00	Free Outfall		HW & TW below Inv.El.=537.500
532.60	.00	Free Outfall		HW & TW below Inv.El.=537.500
532.70	.00	Free Outfall		HW & TW below Inv.El.=537.500
532.80	.00	Free Outfall		HW & TW below Inv.El.=537.500
532.90	.00	Free Outfall		HW & TW below Inv.El.=537.500
533.00	.00	Free Outfall		HW & TW below Inv.El.=537.500
533.10	.00	Free Outfall		HW & TW below Inv.El.=537.500
533.20	.00	Free Outfall		HW & TW below Inv.El.=537.500
533.30	.00	Free Outfall		HW & TW below Inv.El.=537.500
533.40	.00	Free Outfall		HW & TW below Inv.El.=537.500
533.50	.00	Free Outfall		HW & TW below Inv.El.=537.500
533.60	.00	Free Outfall		HW & TW below Inv.El.=537.500
533.70	.00	Free Outfall		HW & TW below Inv.El.=537.500
533.80	.00	Free Outfall		HW & TW below Inv.El.=537.500
533.90	.00	Free Outfall		HW & TW below Inv.El.=537.500
534.00	.00	Free Outfall		HW & TW below Inv.El.=537.500
534.10	.00	Free Outfall		HW & TW below Inv.El.=537.500
534.20	.00	Free Outfall		HW & TW below Inv.El.=537.500
534.30	.00	Free Outfall		HW & TW below Inv.El.=537.500

RATING TABLE FOR ONE OUTLET TYPE

Structure ID = W2 (Weir-Rectangular)

Upstream ID = (Pond Water Surface)
DNstream ID = TW (Pond Outfall)

WS Elev,Device Q	Tail Water	Notes
WS Elev. ft	Q cfs	TW Elev ft	Converge +/-ft	Computation Messages
534.40	.00	Free Outfall		HW & TW below Inv.El.=537.500
534.50	.00	Free Outfall		HW & TW below Inv.El.=537.500
534.60	.00	Free Outfall		HW & TW below Inv.El.=537.500
534.70	.00	Free Outfall		HW & TW below Inv.El.=537.500
534.80	.00	Free Outfall		HW & TW below Inv.El.=537.500
534.90	.00	Free Outfall		HW & TW below Inv.El.=537.500
535.00	.00	Free Outfall		HW & TW below Inv.El.=537.500
535.10	.00	Free Outfall		HW & TW below Inv.El.=537.500
535.20	.00	Free Outfall		HW & TW below Inv.El.=537.500
535.30	.00	Free Outfall		HW & TW below Inv.El.=537.500
535.40	.00	Free Outfall		HW & TW below Inv.El.=537.500
535.50	.00	Free Outfall		HW & TW below Inv.El.=537.500
535.60	.00	Free Outfall		HW & TW below Inv.El.=537.500
535.70	.00	Free Outfall		HW & TW below Inv.El.=537.500
535.80	.00	Free Outfall		HW & TW below Inv.El.=537.500
535.90	.00	Free Outfall		HW & TW below Inv.El.=537.500
536.00	.00	Free Outfall		HW & TW below Inv.El.=537.500
536.10	.00	Free Outfall		HW & TW below Inv.El.=537.500
536.20	.00	Free Outfall		HW & TW below Inv.El.=537.500
536.30	.00	Free Outfall		HW & TW below Inv.El.=537.500
536.40	.00	Free Outfall		HW & TW below Inv.El.=537.500
536.50	.00	Free Outfall		HW & TW below Inv.El.=537.500
536.60	.00	Free Outfall		HW & TW below Inv.El.=537.500
536.70	.00	Free Outfall		HW & TW below Inv.El.=537.500
536.80	.00	Free Outfall		HW & TW below Inv.El.=537.500
536.90	.00	Free Outfall		HW & TW below Inv.El.=537.500
537.00	.00	Free Outfall		HW & TW below Inv.El.=537.500
537.10	.00	Free Outfall		HW & TW below Inv.El.=537.500
537.20	.00	Free Outfall		HW & TW below Inv.El.=537.500
537.30	.00	Free Outfall		HW & TW below Inv.El.=537.500
537.40	.00	Free Outfall		HW & TW below Inv.El.=537.500
537.50	.00	Free Outfall		H=.00; Htw=.00; Qfree=.00;
537.60	2.74	Free Outfall		H=.10; Htw=.00; Qfree=2.74;
537.70	7.75	Free Outfall		H=.20; Htw=.00; Qfree=7.75;

RATING TABLE FOR ONE OUTLET TYPE

Structure ID = W2 (Weir-Rectangular)

Upstream ID = (Pond Water Surface)
DNstream ID = TW (Pond Outfall)

WS Elev,Device Q		Tail Water		Notes
WS Elev. ft	Q cfs	TW Elev Converge ft	+/-ft	Computation Messages
537.80	14.24	Free Outfall		H=.30; Htw=.00; Qfree=14.24;
537.90	21.92	Free Outfall		H=.40; Htw=.00; Qfree=21.92;
538.00	30.64	Free Outfall		H=.50; Htw=.00; Qfree=30.64;
538.10	40.27	Free Outfall		H=.60; Htw=.00; Qfree=40.27;
538.20	50.75	Free Outfall		H=.70; Htw=.00; Qfree=50.75;
538.30	62.01	Free Outfall		H=.80; Htw=.00; Qfree=62.01;
538.40	73.99	Free Outfall		H=.90; Htw=.00; Qfree=73.99;
538.50	86.66	Free Outfall		H=1.00; Htw=.00; Qfree=86.66;
538.60	99.97	Free Outfall		H=1.10; Htw=.00; Qfree=99.97;
538.70	113.92	Free Outfall		H=1.20; Htw=.00; Qfree=113.92;
538.80	128.45	Free Outfall		H=1.30; Htw=.00; Qfree=128.45;
538.90	143.55	Free Outfall		H=1.40; Htw=.00; Qfree=143.55;
539.00	159.20	Free Outfall		H=1.50; Htw=.00; Qfree=159.20;
539.10	175.38	Free Outfall		H=1.60; Htw=.00; Qfree=175.38;
539.20	192.08	Free Outfall		H=1.70; Htw=.00; Qfree=192.08;
539.30	209.27	Free Outfall		H=1.80; Htw=.00; Qfree=209.27;
539.40	226.96	Free Outfall		H=1.90; Htw=.00; Qfree=226.96;
539.50	245.11	Free Outfall		H=2.00; Htw=.00; Qfree=245.11;
539.60	263.71	Free Outfall		H=2.10; Htw=.00; Qfree=263.71;
539.70	282.78	Free Outfall		H=2.20; Htw=.00; Qfree=282.78;
539.80	302.27	Free Outfall		H=2.30; Htw=.00; Qfree=302.27;
539.90	322.20	Free Outfall		H=2.40; Htw=.00; Qfree=322.20;
540.00	342.55	Free Outfall		H=2.50; Htw=.00; Qfree=342.55;
540.10	363.30	Free Outfall		H=2.60; Htw=.00; Qfree=363.30;
540.20	384.47	Free Outfall		H=2.70; Htw=.00; Qfree=384.47;
540.30	406.02	Free Outfall		H=2.80; Htw=.00; Qfree=406.02;
540.40	427.97	Free Outfall		H=2.90; Htw=.00; Qfree=427.97;
540.50	450.29	Free Outfall		H=3.00; Htw=.00; Qfree=450.29;
540.60	472.98	Free Outfall		H=3.10; Htw=.00; Qfree=472.98;
540.70	496.06	Free Outfall		H=3.20; Htw=.00; Qfree=496.06;
540.80	519.49	Free Outfall		H=3.30; Htw=.00; Qfree=519.49;
540.90	543.29	Free Outfall		H=3.40; Htw=.00; Qfree=543.29;
541.00	567.43	Free Outfall		H=3.50; Htw=.00; Qfree=567.43;

***** COMPOSITE OUTFLOW SUMMARY ****

WS Elev, Total Q		Notes		
		Converge		
Elev. ft	Q cfs	TW Elev ft	Error +/-ft	Contributing Structures
531.00	.00	Free Outfall		None contributing
531.10	.00	Free Outfall		None contributing
531.20	.00	Free Outfall		None contributing
531.30	.00	Free Outfall		None contributing
531.40	.00	Free Outfall		None contributing
531.50	.00	Free Outfall		None contributing
531.60	.00	Free Outfall		None contributing
531.70	.00	Free Outfall		None contributing
531.80	.00	Free Outfall		None contributing
531.90	.00	Free Outfall		None contributing
532.00	.00	Free Outfall		None contributing
532.10	.00	Free Outfall		None contributing
532.20	.00	Free Outfall		None contributing
532.30	.00	Free Outfall		None contributing
532.40	.00	Free Outfall		None contributing
532.50	.00	Free Outfall		None contributing
532.60	.00	Free Outfall		None contributing
532.70	.00	Free Outfall		None contributing
532.80	.00	Free Outfall		None contributing
532.90	.00	Free Outfall		None contributing
533.00	.00	Free Outfall		W1
533.10	.34	Free Outfall		W1
533.20	.95	Free Outfall		W1
533.30	1.75	Free Outfall		W1
533.40	2.70	Free Outfall		W1
533.50	3.77	Free Outfall		W1
533.60	4.96	Free Outfall		W1
533.70	6.25	Free Outfall		W1
533.80	7.64	Free Outfall		W1
533.90	9.11	Free Outfall		W1
534.00	10.67	Free Outfall		W1
534.10	12.32	Free Outfall		W1
534.20	14.03	Free Outfall		W1
534.30	15.82	Free Outfall		W1
534.40	17.68	Free Outfall		W1
534.50	19.61	Free Outfall		W1
534.60	21.60	Free Outfall		W1
534.70	23.66	Free Outfall		W1

***** COMPO5ITE OUTFLOW 5UMMARY ****

W5 Elev, Total Q		Notes	
		Converge	
Elev. ft	Q cfs	TW Elev ft	Error +/-ft	Contributing 5tructures
534.80	25.78	Free Outfall		W1
534.90	27.96	Free Outfall		W1
535.00	30.19	Free Outfall		W1
535.10	32.49	Free Outfall		W1
535.20	34.83	Free Outfall		W1
535.30	37.24	Free Outfall		W1
535.40	39.69	Free Outfall		W1
535.50	42.20	Free Outfall		W1
535.60	44.75	Free Outfall		W1
535.70	47.36	Free Outfall		W1
535.80	50.02	Free Outfall		W1
535.90	52.72	Free Outfall		W1
536.00	55.47	Free Outfall		W1
536.10	58.27	Free Outfall		W1
536.20	61.11	Free Outfall		W1
536.30	64.00	Free Outfall		W1
536.40	66.93	Free Outfall		W1
536.50	69.90	Free Outfall		W1
536.60	72.92	Free Outfall		W1
536.70	75.98	Free Outfall		W1
536.80	79.08	Free Outfall		W1
536.90	82.22	Free Outfall		W1
537.00	85.40	Free Outfall		W1
537.10	88.63	Free Outfall		W1
537.20	91.89	Free Outfall		W1
537.30	95.19	Free Outfall		W1
537.40	98.53	Free Outfall		W1
537.50	101.91	Free Outfall		W1 +W2
537.60	108.06	Free Outfall		W1 +W2
537.70	116.53	Free Outfall		W1 +W2
537.80	126.51	Free Outfall		W1 +W2
537.90	137.72	Free Outfall		W1 +W2
538.00	150.00	Free Outfall		W1 +W2
538.10	163.23	Free Outfall		W1 +W2
538.20	177.35	Free Outfall		W1 +W2
538.30	192.27	Free Outfall		W1 +W2
538.40	207.96	Free Outfall		W1 +W2
538.50	224.36	Free Outfall		W1 +W2

File.... C:\Haestad\PPKW\Job Files\ProgressPoint-PhaseII_200-2180-20\R\Q.PPW

***** COMPOSITE OUTFLOW SUMMARY ****

WS Elev, Total Q		Notes		
		Converge		
Elev. ft	Q cfs	TW Elev ft	Error +/-ft	Contributing Structures
538.60	241.45	Free Outfall		W1 +W2
538.70	259.20	Free Outfall		W1 +W2
538.80	277.57	Free Outfall		W1 +W2
538.90	296.55	Free Outfall		W1 +W2
539.00	316.10	Free Outfall		W1 +W2
539.10	336.22	Free Outfall		W1 +W2
539.20	356.90	Free Outfall		W1 +W2
539.30	378.09	Free Outfall		W1 +W2
539.40	399.81	Free Outfall		W1 +W2
539.50	422.03	Free Outfall		W1 +W2
539.60	444.73	Free Outfall		W1 +W2
539.70	467.93	Free Outfall		W1 +W2
539.80	491.58	Free Outfall		W1 +W2
539.90	515.71	Free Outfall		W1 +W2
540.00	540.27	Free Outfall		W1 +W2
540.10	565.27	Free Outfall		W1 +W2
540.20	590.73	Free Outfall		W1 +W2
540.30	616.59	Free Outfall		W1 +W2
540.40	642.88	Free Outfall		W1 +W2
540.50	669.57	Free Outfall		W1 +W2
540.60	696.67	Free Outfall		W1 +W2
540.70	724.18	Free Outfall		W1 +W2
540.80	752.06	Free Outfall		W1 +W2
540.90	780.35	Free Outfall		W1 +W2
541.00	809.01	Free Outfall		W1 +W2

LEVEL POOL ROUTING DATA

HYG Dir = C:\Haestad\PPKW\Job Files\ProgressPoint-PhaseII_200-2180-20\R\
Inflow HYG file = work_pad.hyg - BASIN 2 IN 002
Outflow HYG file = work_pad.hyg - BASIN 2 OUT 002

Pond Node Data = BASIN 2
Pond Volume Data = BASIN 2
Pond Outlet Data = BASIN 2 OUTLET 4

No Infiltration

INITIAL CONDITIONS

Starting WS Elev	=	533.00 ft
Starting Volume	=	3.536 ac-ft
Starting Outflow	=	.00 cfs
Starting Infiltr.	=	.00 cfs
Starting Total Qout	=	.00 cfs
Time Increment	=	.0250 hrs

Elevation ft	Outflow cfs	Storage ac-ft	Area acres	Infilt. cfs	Q Total cfs	2S/t + O cfs
531.00	.00	.000	1.6691	.00	.00	.00
531.10	.00	.167	1.6789	.00	.00	162.00
531.20	.00	.336	1.6887	.00	.00	325.05
531.30	.00	.505	1.6985	.00	.00	488.95
531.40	.00	.676	1.7083	.00	.00	653.90
531.50	.00	.847	1.7182	.00	.00	819.70
531.60	.00	1.019	1.7281	.00	.00	986.46
531.70	.00	1.192	1.7380	.00	.00	1154.28
531.80	.00	1.367	1.7480	.00	.00	1322.96
531.90	.00	1.542	1.7580	.00	.00	1492.71
532.00	.00	1.718	1.7680	.00	.00	1663.33
532.10	.00	1.896	1.7779	.00	.00	1834.90
532.20	.00	2.074	1.7878	.00	.00	2007.54
532.30	.00	2.253	1.7977	.00	.00	2181.04
532.40	.00	2.433	1.8077	.00	.00	2355.61
532.50	.00	2.615	1.8177	.00	.00	2531.03
532.60	.00	2.797	1.8277	.00	.00	2707.43
532.70	.00	2.980	1.8378	.00	.00	2884.91
532.80	.00	3.165	1.8479	.00	.00	3063.25
532.90	.00	3.350	1.8580	.00	.00	3242.68
533.00	.00	3.536	1.8681	.00	.00	3422.98
533.10	.34	3.723	1.8781	.00	.34	3604.59
533.20	.95	3.912	1.8881	.00	.95	3787.56

POST-DEVELOPMENT CONDITIONS

LEVEL POOL ROUTING DATA

HYG Dir = C:\Haestad\PPKW\Job Files\ProgressPoint-PhaseII_200-2180-20\R\
Inflow HYG file = work_pad.hyg - BASIN 2 IN 002
Outflow HYG file = work_pad.hyg - BASIN 2 OUT 002

Pond Node Data = BASIN 2
Pond Volume Data = BASIN 2
Pond Outlet Data = BASIN 2 OUTLET 4

No Infiltration

INITIAL CONDITIONS

Starting WS Elev	=	533.00 ft
Starting Volume	=	3.536 ac-ft
Starting Outflow	=	.00 cfs
Starting Infiltr.	=	.00 cfs
Starting Total Qout	=	.00 cfs
Time Increment	=	.0250 hrs

Elevation ft	Outflow cfs	Storage ac-ft	Area acres	Infilt. cfs	Q Total cfs	2S/t + O cfs
533.30	1.75	4.101	1.8981	.00	1.75	3971.56
533.40	2.70	4.291	1.9081	.00	2.70	4156.80
533.50	3.77	4.483	1.9182	.00	3.77	4343.02
533.60	4.96	4.675	1.9283	.00	4.96	4530.33
533.70	6.25	4.868	1.9384	.00	6.25	4718.84
533.80	7.64	5.063	1.9485	.00	7.64	4908.31
533.90	9.11	5.258	1.9587	.00	9.11	5098.96
534.00	10.67	5.454	1.9689	.00	10.67	5290.57
534.10	12.32	5.652	1.9791	.00	12.32	5483.25
534.20	14.03	5.850	1.9894	.00	14.03	5677.12
534.30	15.82	6.050	1.9997	.00	15.82	5871.93
534.40	17.68	6.250	2.0100	.00	17.68	6067.93
534.50	19.61	6.452	2.0203	.00	19.61	6264.87
534.60	21.60	6.654	2.0306	.00	21.60	6462.88
534.70	23.66	6.858	2.0410	.00	23.66	6662.08
534.80	25.78	7.062	2.0514	.00	25.78	6862.23
534.90	27.96	7.268	2.0619	.00	27.96	7063.56
535.00	30.19	7.475	2.0723	.00	30.19	7265.84
535.10	32.49	7.683	2.0826	.00	32.49	7469.19
535.20	34.83	7.891	2.0928	.00	34.83	7673.70
535.30	37.24	8.101	2.1031	.00	37.24	7879.13
535.40	39.69	8.312	2.1134	.00	39.69	8085.74
535.50	42.20	8.524	2.1237	.00	42.20	8293.27

POST-DEVELOPMENT CONDITIONS

LEVEL POOL ROUTING DATA

HYG Dir = C:\Haestad\PPKW\Job Files\ProgressPoint-PhaseII_200-2180-20\R\
Inflow HYG file = work_pad.hyg - BASIN 2 IN 002
Outflow HYG file = work_pad.hyg - BASIN 2 OUT 002

Pond Node Data = BASIN 2
Pond Volume Data = BASIN 2
Pond Outlet Data = BASIN 2 OUTLET 4

No Infiltration

INITIAL CONDITIONS

Starting WS Elev = 533.00 ft
Starting Volume = 3.536 ac-ft
Starting Outflow = .00 cfs
Starting Infiltr. = .00 cfs
Starting Total Qout= .00 cfs
Time Increment = .0250 hrs

Elevation ft	Outflow cfs	Storage ac-ft	Area acres	Infilt. cfs	Q Total cfs	2S/t + O cfs
535.60	44.75	8.737	2.1341	.00	44.75	8501.86
535.70	47.36	8.951	2.1445	.00	47.36	8711.63
535.80	50.02	9.166	2.1549	.00	50.02	8922.32
535.90	52.72	9.382	2.1653	.00	52.72	9134.20
536.00	55.47	9.599	2.1758	.00	55.47	9347.01
536.10	58.27	9.817	2.1863	.00	58.27	9560.88
536.20	61.11	10.036	2.1968	.00	61.11	9775.94
536.30	64.00	10.256	2.2073	.00	64.00	9991.93
536.40	66.93	10.477	2.2179	.00	66.93	10209.12
536.50	69.90	10.700	2.2285	.00	69.90	10427.24
536.60	72.92	10.923	2.2391	.00	72.92	10646.43
536.70	75.98	11.148	2.2497	.00	75.98	10866.83
536.80	79.08	11.373	2.2604	.00	79.08	11088.16
536.90	82.22	11.600	2.2710	.00	82.22	11310.70
537.00	85.40	11.827	2.2817	.00	85.40	11534.18
537.10	88.63	12.056	2.2923	.00	88.63	11758.74
537.20	91.89	12.286	2.3029	.00	91.89	11984.49
537.30	95.19	12.517	2.3135	.00	95.19	12211.17
537.40	98.53	12.748	2.3241	.00	98.53	12439.05
537.50	101.91	12.981	2.3348	.00	101.91	12667.86
537.60	108.06	13.215	2.3454	.00	108.06	12900.49
537.70	116.53	13.450	2.3562	.00	116.53	13136.59
537.80	126.51	13.687	2.3669	.00	126.51	13375.11

LEVEL POOL ROUTING DATA

HYG Dir = C:\Haestad\PPKW\Job Files\ProgressPoint-PhaseII_200-2180-20\R\
Inflow HYG file = work_pad.hyg - BASIN 2 IN 002
Outflow HYG file = work_pad.hyg - BASIN 2 OUT 002

Pond Node Data = BASIN 2
Pond Volume Data = BASIN 2
Pond Outlet Data = BASIN 2 OUTLET 4

No Infiltration

INITIAL CONDITIONS

Starting WS Elev	=	533.00 ft
Starting Volume	=	3.536 ac-ft
Starting Outflow	=	.00 cfs
Starting Infiltr.	=	.00 cfs
Starting Total Qout	=	.00 cfs
Time Increment	=	.0250 hrs

Elevation ft	Outflow cfs	Storage ac-ft	Area acres	Infilt. cfs	Q Total cfs	2S/t + O cfs
537.90	137.72	13.924	2.3776	.00	137.72	13616.04
538.00	150.00	14.162	2.3884	.00	150.00	13858.93
538.10	163.23	14.401	2.3991	.00	163.23	14103.83
538.20	177.35	14.642	2.4098	.00	177.35	14350.78
538.30	192.27	14.883	2.4205	.00	192.27	14599.43
538.40	207.96	15.126	2.4313	.00	207.96	14850.04
538.50	224.36	15.370	2.4421	.00	224.36	15102.25
538.60	241.45	15.614	2.4529	.00	241.45	15356.20
538.70	259.20	15.860	2.4637	.00	259.20	15612.00
538.80	277.57	16.107	2.4746	.00	277.57	15869.32
538.90	296.55	16.355	2.4855	.00	296.55	16128.46
539.00	316.10	16.604	2.4964	.00	316.10	16389.07
539.10	336.22	16.854	2.5071	.00	336.22	16651.30
539.20	356.90	17.106	2.5179	.00	356.90	16915.27
539.30	378.09	17.358	2.5287	.00	378.09	17180.66
539.40	399.81	17.612	2.5396	.00	399.81	17447.79
539.50	422.03	17.866	2.5504	.00	422.03	17716.29
539.60	444.73	18.122	2.5613	.00	444.73	17986.34
539.70	467.93	18.378	2.5722	.00	467.93	18258.10
539.80	491.58	18.636	2.5832	.00	491.58	18531.21
539.90	515.71	18.895	2.5941	.00	515.71	18806.01
540.00	540.27	19.155	2.6051	.00	540.27	19082.15
540.10	565.27	19.416	2.6161	.00	565.27	19359.79

POST-DEVELOPMENT CONDITIONS

LEVEL POOL ROUTING DATA

HYG Dir = C:\Haestad\PPKW\Job Files\ProgressPoint-PhaseII_200-2180-20\R\
Inflow HYG file = work_pad.hyg - BASIN 2 IN 002
Outflow HYG file = work_pad.hyg - BASIN 2 OUT 002

Pond Node Data = BASIN 2
Pond Volume Data = BASIN 2
Pond Outlet Data = BASIN 2 OUTLET 4

No Infiltration

INITIAL CONDITIONS

Starting WS Elev	=	533.00 ft
Starting Volume	=	3.536 ac-ft
Starting Outflow	=	.00 cfs
Starting Infiltr.	=	.00 cfs
Starting Total Qout	=	.00 cfs
Time Increment	=	.0250 hrs

Elevation ft	Outflow cfs	Storage ac-ft	Area acres	Infilt. cfs	Q Total cfs	2S/t + O cfs
540.20	590.73	19.678	2.6271	.00	590.73	19639.11
540.30	616.59	19.941	2.6382	.00	616.59	19919.75
540.40	642.88	20.206	2.6492	.00	642.88	20202.04
540.50	669.57	20.471	2.6603	.00	669.57	20485.66
540.60	696.67	20.738	2.6714	.00	696.67	20770.74
540.70	724.18	21.005	2.6826	.00	724.18	21057.48
540.80	752.06	21.274	2.6937	.00	752.06	21345.52
540.90	780.35	21.544	2.7049	.00	780.35	21635.20
541.00	809.01	21.815	2.7161	.00	809.01	21926.17

LEVEL POOL ROUTING SUMMARY

HYG Dir = C:\Haestad\PPKW\Job Files\ProgressPoint-PhaseII_200-2180-20\R\
Inflow HYG file = work_pad.hyg - BASIN 2 IN 002
Outflow HYG file = work_pad.hyg - BASIN 2 OUT 002

Pond Node Data = BASIN 2
Pond Volume Data = BASIN 2
Pond Outlet Data = BASIN 2 OUTLET 4

No Infiltration

INITIAL CONDITIONS

Starting WS Elev	=	533.00 ft
Starting Volume	=	3.536 ac-ft
Starting Outflow	=	.00 cfs
Starting Infiltr.	=	.00 cfs
Starting Total Qout	=	.00 cfs
Time Increment	=	.0250 hrs

INFLOW/OUTFLOW HYDROGRAPH SUMMARY

Peak Inflow	=	254.65 cfs	at	11.9250 hrs
Peak Outflow	=	61.10 cfs	at	12.1000 hrs
Peak Elevation	=	536.20 ft		
Peak Storage	=	10.035 ac-ft		

MASS BALANCE (ac-ft)

+ Initial Vol	=	3.536
+ HYG Vol IN	=	14.573
- Infiltration	=	.000
- HYG Vol OUT	=	14.566
- Retained Vol	=	3.543
Unrouted Vol	=	.000 ac-ft (.000% of Inflow Volume)

POST-DEVELOPMENT CONDITIONS

LEVEL POOL ROUTING SUMMARY

HYG Dir = C:\Haestad\PPKW\Job Files\ProgressPoint-PhaseII_200-2180-20\R\
Inflow HYG file = work_pad.hyg - BASIN 2 IN 015
Outflow HYG file = work_pad.hyg - BASIN 2 OUT 015

Pond Node Data = BASIN 2
Pond Volume Data = BASIN 2
Pond Outlet Data = BASIN 2 OUTLET 4

No Infiltration

INITIAL CONDITIONS

Starting WS Elev	=	533.00 ft
Starting Volume	=	3.536 ac-ft
Starting Outflow	=	.00 cfs
Starting Infiltr.	=	.00 cfs
Starting Total Qout	=	.00 cfs
Time Increment	=	.0250 hrs

INFLOW/OUTFLOW HYDROGRAPH SUMMARY

Peak Inflow	=	370.48 cfs	at	11.9250 hrs
Peak Outflow	=	98.77 cfs	at	12.1000 hrs
Peak Elevation	=	537.41 ft		
Peak Storage	=	12.765 ac-ft		

MASS BALANCE (ac-ft)

+ Initial Vol	=	3.536
+ HYG Vol IN	=	21.718
- Infiltration	=	.000
- HYG Vol OUT	=	21.709
- Retained Vol	=	3.545
Unrouted Vol	=	.000 ac-ft (.000% of Inflow Volume)

POST-DEVELOPMENT CONDITIONS

LEVEL POOL ROUTING SUMMARY

HYG Dir = C:\Haestad\PPKW\Job Files\ProgressPoint-PhaseII_200-2180-20\R\
Inflow HYG file = work_pad.hyg - BASIN 2 IN 025
Outflow HYG file = work_pad.hyg - BASIN 2 OUT 025

Pond Node Data = BASIN 2
Pond Volume Data = BASIN 2
Pond Outlet Data = BASIN 2 OUTLET 4

No Infiltration

INITIAL CONDITIONS

Starting WS Elev	=	533.00 ft
Starting Volume	=	3.536 ac-ft
Starting Outflow	=	.00 cfs
Starting Infiltr.	=	.00 cfs
Starting Total Qout	=	.00 cfs
Time Increment	=	.0250 hrs

INFLOW/OUTFLOW HYDROGRAPH SUMMARY

Peak Inflow	=	420.88 cfs	at	11.9250 hrs
Peak Outflow	=	133.44 cfs	at	12.0750 hrs
Peak Elevation	=	537.86 ft		
Peak Storage	=	13.833 ac-ft		

MASS BALANCE (ac-ft)

+ Initial Vol	=	3.536
+ HYG Vol IN	=	24.864
- Infiltration	=	.000
- HYG Vol OUT	=	24.854
- Retained Vol	=	3.545
Unrouted Vol	=	-.000 ac-ft (.000% of Inflow Volume)

13.83 X 43,560 = 602,935 CF
FOR 20 MIN STORM = 502 CFS
FOR 30 MIN STORM = 334 CFS STORAGE

S/N: 4216015070C1 Stock & Associates
PondPack Ver: Compute Time: Date:

LEVEL POOL ROUTING SUMMARY

HYG Dir = C:\Haestad\PPKW\Job Files\ProgressPoint-PhaseII_200-2180-20\R\
Inflow HYG file = work_pad.hyg - BASIN 2 IN 100
Outflow HYG file = work_pad.hyg - BASIN 2 OUT 100

Pond Node Data = BASIN 2
Pond Volume Data = BASIN 2
Pond Outlet Data = BASIN 2 OUTLET 4

No Infiltration

INITIAL CONDITIONS

Starting WS Elev	=	533.00 ft
Starting Volume	=	3.536 ac-ft
Starting Outflow	=	.00 cfs
Starting Infiltr.	=	.00 cfs
Starting Total Qout	=	.00 cfs
Time Increment	=	.0250 hrs

INFLOW/OUTFLOW HYDROGRAPH SUMMARY

Peak Inflow	=	547.07 cfs	at	11.9250 hrs
Peak Outflow	=	260.65 cfs	at	12.0500 hrs
Peak Elevation	=	538.71 ft		
Peak Storage	=	15.880 ac-ft		

MASS BALANCE (ac-ft)

+ Initial Vol	=	3.536
+ HYG Vol IN	=	32.799
- Infiltration	=	.000
- HYG Vol OUT	=	32.788
- Retained Vol	=	3.547
Unrouted Vol	=	-.000 ac-ft (.000% of Inflow Volume)

POST-DEVELOPMENT CONDITIONS

V. APPENDIX

A. Location Map
F. Soil Survey Map and Soil Information
G. Soil Name and Hydrologic Information
H. Design Storms for Northeastern Missouri from ISWS Bulletin 71
I. SCS Unit Hydrograph Equations

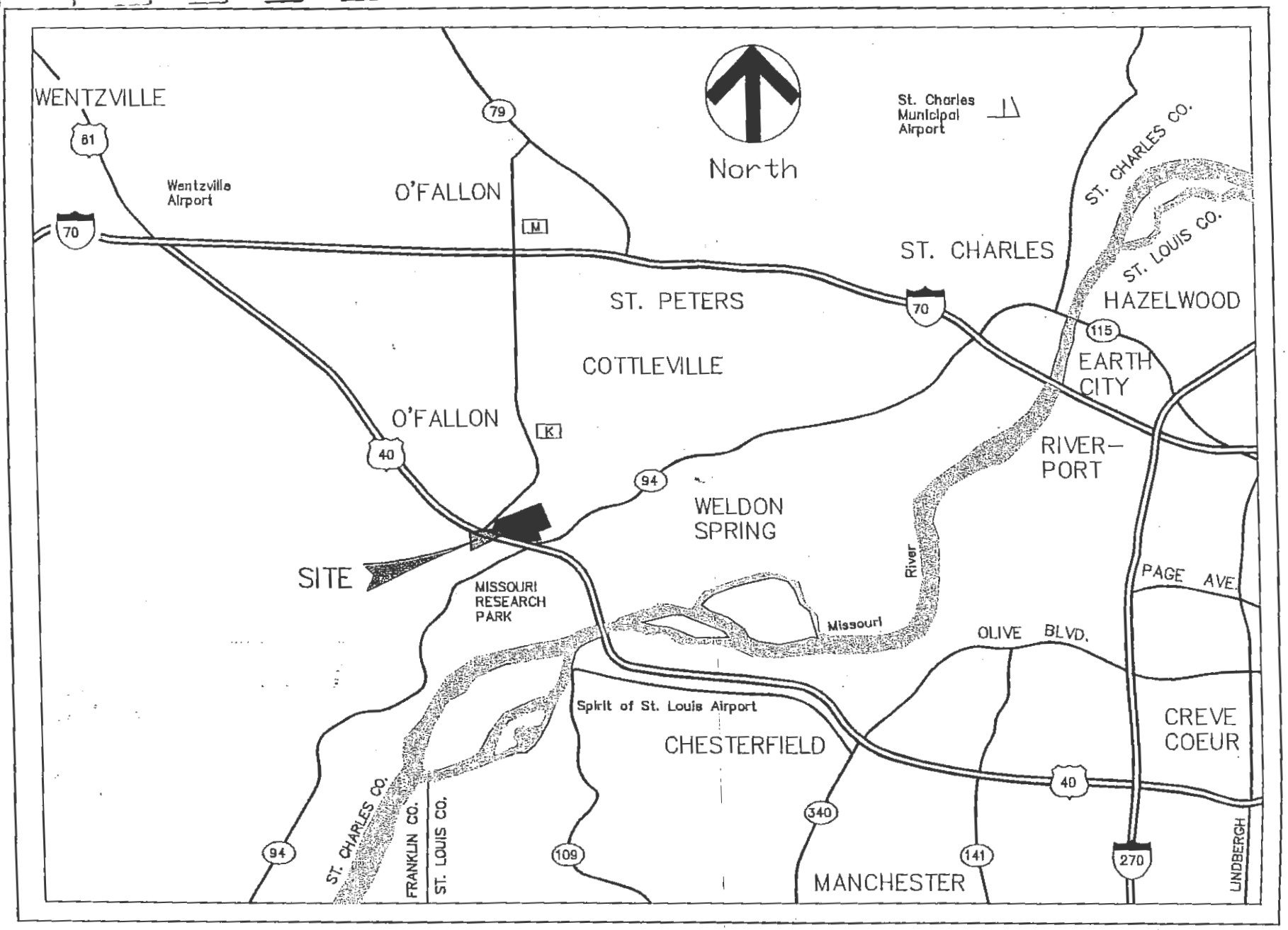

LOCATION MAP

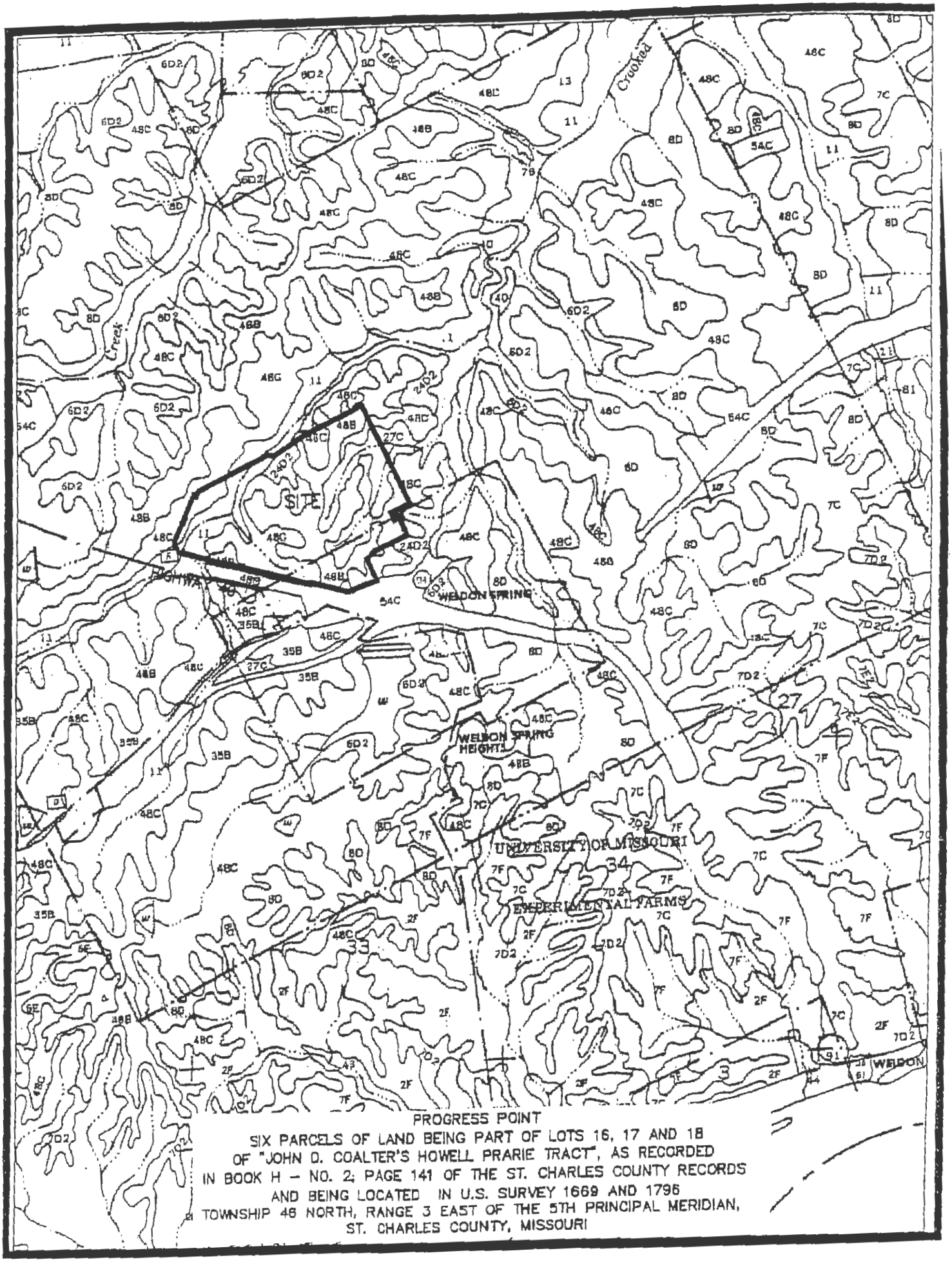

PROGRESS POINT

SIX PARCELS OF LAND BEING PART OF LOTS 16, 17 AND 18
OF "JOHN D. COALTER'S HOWELL PRARIE TRACT", AS RECORDED
IN BOOK H – NO. 2; PAGE 141 OF THE ST. CHARLES COUNTY RECORDS
AND BEING LOCATED IN U.S. SURVEY 1669 AND 1795
TOWNSHIP 46 NORTH, RANGE 3 EAST OF THE 5TH PRINCIPAL MERIDIAN,
ST. CHARLES COUNTY, MISSOURI

SEP 12 2001 11:17AM STOCK & ASSOCIATES 314-432-8171 P.7

TABLE 17.--SOIL AND WATER FEATURES

["Flooding" and "water table" and terms such as "rare," "brief," "apparent," and "perched" are explained in the text. The symbol > means more than. Absence of an entry indicates that the feature is not a concern or that data were not estimated]

Soil name and map symbol	Hydrologic group	Flooding			High water table			Bedrock		Potential frost action	Risk of corrosion	
		Frequency	Duration	Months	Depth	Kind	Months	Depth	Hardness		Uncoated steel	Concrete
					Ft			In				
2D, 2F---------- Goss	B	None---------	---	---	>6.0	---	---	>60	---	Moderate	Moderate	Moderate.
3---------- Twomile	C/D	Rare---------	---	---	1.0-2.0	Perched	Nov-May	>60	---	High-----	High-----	High.
4D*: Menfro----------	B	None---------	---	---	>6.0	---	---	>60	---	High-----	Low------	Moderate.
Goss----------	B	None---------	---	---	>6.0	---	---	>60	---	Moderate	Moderate	Moderate.
6C, 6D2, 6E------- Crider	B	None---------	---	---	>6.0	---	---	>60	---	---	Moderate	Moderate.
7B, 7C, 7D2, 7E2, 7F---------- Menfro	B	None---------	---	---	>6.0	---	---	>60	---	High-----	Low------	Moderate.
8C, 8D, 8E2------- Winfield	B	None---------	---	---	2.5-4.0	Perched	Nov-Apr	>60	---	High-----	Moderate	Moderate.
9E---------- Holstein	B	None---------	---	---	>6.0	---	---	>60	---	Moderate	Moderate	Moderate.
10F*: Gasconade-------- Rock outcrop.	D	None---------	---	---	>6.0	---	---	10-20	Hard	Moderate	High-----	Low.
11---------- Dockery	C	Occasional	Brief-----	Nov-Jun	1.0-3.0	Apparent	Nov-Apr	>60	---	High-----	Moderate	Low.
12---------- Kennebec	B	Occasional	Brief-----	Feb-Nov	3.0-5.0	Apparent	Nov-Jul	>60	---	High-----	Moderate	Low.
13---------- Auxvasse	D	Rare---------	---	---	1.0-2.0	Perched	Nov-May	>60	---	Moderate	High-----	High.
22F*: Gatewood---------	C	None---------	---	---	>6.0	---	---	20-40	Hard	Moderate	High-----	Moderate.
Gasconade--------	D	None---------	---	---	>6.0	---	---	10-20	Hard	Moderate	High-----	Low.
Crider----------	B	None---------	---	---	>6.0	---	---	>60	---	---	Moderate	Moderate.
24D2---------- Keswick	D	None---------	---	---	1.0-3.0	Perched	Nov-Jul	>60	---	High-----	High-----	Moderate.
27C---------- Armster	C	None---------	---	---	2.5-4.0	Perched	Nov-Mar	>60	---	Moderate	High-----	Moderate.

See footnote at end of table.

TABLE 17.--SOIL AND WATER FEATURES--Continued

Soil name and map symbol	Hydrologic group	Flooding			High water table			Bedrock		Potential frost action	Risk of corrosion	
		Frequency	Duration	Months	Depth	Kind	Months	Depth	Hardness		Uncoated steel	Concrete
					Ft			In				
31C---------- Hatton	C	None--------	---	---	1.5-3.0	Perched	Oct-Apr	>60	---	High-----	High-----	Moderate.
34E---------- Lindley	C	None--------	---	---	>6.0	---	---	>60	---	Moderate	Moderate	Moderate.
35B---------- Mexico	D	None--------	---	---	1.0-2.0	Perched	Nov-Apr	>60	---	Moderate	High-----	Moderate.
37---------- Marion	D	None--------	---	---	1.0-2.0	Perched	Nov-May	>60	---	Moderate	High-----	High.
40---------- Westerville	C	Rare--------	---	---	1.0-3.0	Apparent	Nov-Apr	>60	---	High-----	---	---
41---------- Freeburg	C	Rare--------	---	---	1.5-3.0	Perched	Nov-May	>60	---	High-----	Moderate	High.
43---------- Cedargap	B	Occasional	Very brief	Nov-Mar	>6.0	---	---	>60	---	Moderate	Low------	Low.
44---------- Sensabaugh	B	Occasional	Very brief	Jan-Apr	4.0-6.0	Apparent	Jan-Apr	>60	---	---	Low------	Low.
48A, 48B, 48C----- Weller	C	None--------	---	---	2.0-4.0	Apparent	Nov-Jul	>60	---	High-----	High-----	High.
54C*, 54D*: Harvester--------	B	None--------	---	---	>6.0	---	---	>60	---	High-----	Low------	Low.
Urban land.												
62---------- Edinburg	C	None--------	---	---	+.5-2.0	Apparent	Mar-Jun	>60	---	High-----	High-----	Moderate.
63B---------- Herrick	B	None--------	---	---	1.0-3.0	Apparent	Mar-Jun	>60	---	High-----	High-----	High.
67E---------- Menfro	B	None--------	---	---	>6.0	---	---	>60	---	High-----	Low------	Moderate.
70---------- Booker	D	Frequent----	Brief to long.	Apr-Jul	+.5-1.0	Perched	Nov-May	>60	---	Moderate	High-----	Moderate.
71---------- Waldron	D	Rare--------	Brief-----	Mar-Jun	1.0-3.0	Perched	Nov-May	>60	---	High-----	High-----	Low.
72---------- Blake	B	Rare--------	Very brief	Feb-Nov	2.0-4.0	Apparent	Nov-Jul	>60	---	High-----	High-----	Low.
73---------- Haynie	B	Rare--------	Very brief	Feb-Nov	>6.0	---	---	>60	---	High-----	Low------	Low.

See footnote at end of table.

APPENDIX

TABLE OF CONTENTS

********** DESIGN STORMS SUMMARY **********

MO-Reg-2 24 hr.. Design Storms 1.01

********** RUNOFF HYDROGRAPHS **********

SCS Unit Hyd. Equations 2.01

File.... C:\HAESTAD\PPKW\RAINFALL\MONE-B71.RNQ
Title... Progress Point Phase II
Project No 2180

DESIGN STORMS SUMMARY

Design Storm File,ID = MONE-B71.RNQ MO-Reg-2 24 hr

Storm Tag Name = 2 YR
Description: MO Region 2 - 2 YR 24 hr

Data Type, File, ID = Synthetic Storm SCSTYPES.RNF TypeII 24hr
Storm Frequency = 2 yr
Total Rainfall Depth= 3.5000 in
Duration Multiplier = 1
Resulting Duration = 24.0000 hrs
Resulting Start Time= .0000 hrs Step= .1000 hrs End= 24.0000 hrs

Storm Tag Name = 15 YR
Description: MO Region 2 - 15 YR 24 hr

Data Type, File, ID = Synthetic Storm SCSTYPES.RNF TypeII 24hr
Storm Frequency = 15 yr
Total Rainfall Depth= 4.9900 in
Duration Multiplier = 1
Resulting Duration = 24.0000 hrs
Resulting Start Time= .0000 hrs Step= .1000 hrs End= 24.0000 hrs

Storm Tag Name = 25 YR
Description: MO Region 2 - 25 YR 24 hr

Data Type, File, ID = Synthetic Storm SCSTYPES.RNF TypeII 24hr
Storm Frequency = 25 yr
Total Rainfall Depth= 5.6000 in
Duration Multiplier = 1
Resulting Duration = 24.0000 hrs
Resulting Start Time= .0000 hrs Step= .1000 hrs End= 24.0000 hrs

Storm Tag Name = 100 YR
Description: MO Region 2 - 100 YR 24 hr

Data Type, File, ID = Synthetic Storm SCSTYPES.RNF TypeII 24hr
Storm Frequency = 100 yr
Total Rainfall Depth= 7.2100 in
Duration Multiplier = 1
Resulting Duration = 24.0000 hrs
Resulting Start Time= .0000 hrs Step= .1000 hrs End= 24.0000 hrs

SCS UNIT HYDROGRAPH METHOD
(Computational Notes)

DEFINITION OF TERMS: ----------

At = Total area (acres): At = Ai+Ap
Ai = Impervious area (acres)
Ap = Pervious area (acres)
CNi = Runoff curve number for impervious area
CNp = Runoff curve number for pervious area
fLoss = f loss constant infiltration (depth/time)
dt = Computational increment (duration of unit excess rainfall)
Default dt is smallest value of 0.1333Tc, rtm, and th
(Smallest dt is then adjusted to match up with Tp)
UDdt = User specified override computational main time increment
(only used if UDdt is => .1333Tc)
D(t) = Point on distribution curve (fraction of P) for time step t

K = 2 / (1 + (Tr/Tp)): default K = 0.75: (for Tr/Tp = 1.67)
Ks = Hydrograph shape factor
= Unit Conversions * K:
= ((1hr/3600sec) * (1ft/12in) * ((5280ft)**2/sq.mi)) * K
Default Ks = 645.333 * 0.75 = 484

Lag = Lag time from center of excess runoff (dt) to Tp: Lag = 0.6Tc
P = Total precipitation depth, inches
Pa(t) = Accumulated rainfall at time step t
Pi(t) = Incremental rainfall at time step t
qp = Peak discharge (cfs) for 1in. runoff, for 1hr, for 1 sq.mi.
= (Ks * A * Q) / Tp (where Q = 1in. runoff, A=sq.mi.)
Qu(t) = Unit hydrograph ordinate (cfs) at time step t
Q(t) = Final hydrograph ordinate (cfs) at time step t
Rai(t)= Accumulated runoff (inches) at time step t for impervious area
Rap(t)= Accumulated runoff (inches) at time step t for pervious area
Rii(t)= Incremental runoff (inches) at time step t for impervious area
Rip(t)= Incremental runoff (inches) at time step t for pervious area
R(t) = Incremental weighted total runoff (inches)
Rtm = Time increment for rainfall table (.RNF file)
Si = S for impervious area: Si = (1000/CNi) - 10
Sp = S for pervious area: Sp = (1000/CNp) - 10
t = Time step (row) number
Tc = Time of concentration
Tb = Time (hrs) of entire unit hydrograph: Tb = Tp + Tr
Tp = Time (hrs) to peak of a unit hydrograph: Tp = (dt/2) + Lag
Tr = Time (hrs) of receding limb of unit hydrograph: Tr = ratio of Tp

SCS UNIT HYDROGRAPH METHOD
(Computational Notes)

PRECIPITATION: ----------
Column (1): Time for time step t
Column (2): D(t) = Point on distribution curve for time step t
Column (3): Pi(t) = Pa(t) - Pa(t-1): Col.(4) - Preceding Col.(4)
Column (4): Pa(t) = D(t) x P: Col.(2) x P

PERVIOUS AREA RUNOFF (using SCS Runoff CN Method) ----------
Column (5): Rap(t) = Accumulated pervious runoff for time step t
If (Pa(t) is <= 0.2Sp) then use: Rap(t) = 0.0
If (Pa(t) is > 0.2Sp) then use:

Rap(t) = (Col.(4)-0.2Sp)**2 / (Col.(4)+0.85p)

Column (6): Rip(t) = Incremental pervious runoff for time step t
Rip(t) = Rap(t) - Rap(t-1)
Rip(t) = Col.(5) for current row - Col.(5) for preceding row.

IMPERVIOUS AREA RUNOFF ----------
Column (7 & 8)... Did not specify to use impervious areas.

INCREMENTAL WEIGHTED RUNOFF: ----------
Column (9): R(t) = (Ap/At) x Rip(t) + (Ai/At) x Rii(t)
R(t) = (Ap/At) x Col.(6) + (Ai/At) x Col.(8)

SCS UNIT HYDROGRAPH METHOD: ----------
Column (10): Q(t) is computed with the SCS unit hydrograph method
using R() and Qu().

V. **DRAWINGS**

C00 - PREDEVELOPED DRAINAGE AREA PLAN
C7.3 - OUTLET STRUCTURE DETAILS
C8.1 - DEVELOPED DRAINAGE AREA PLAN

PRE-DEVELOPED DRAINAGE AREA PLAN

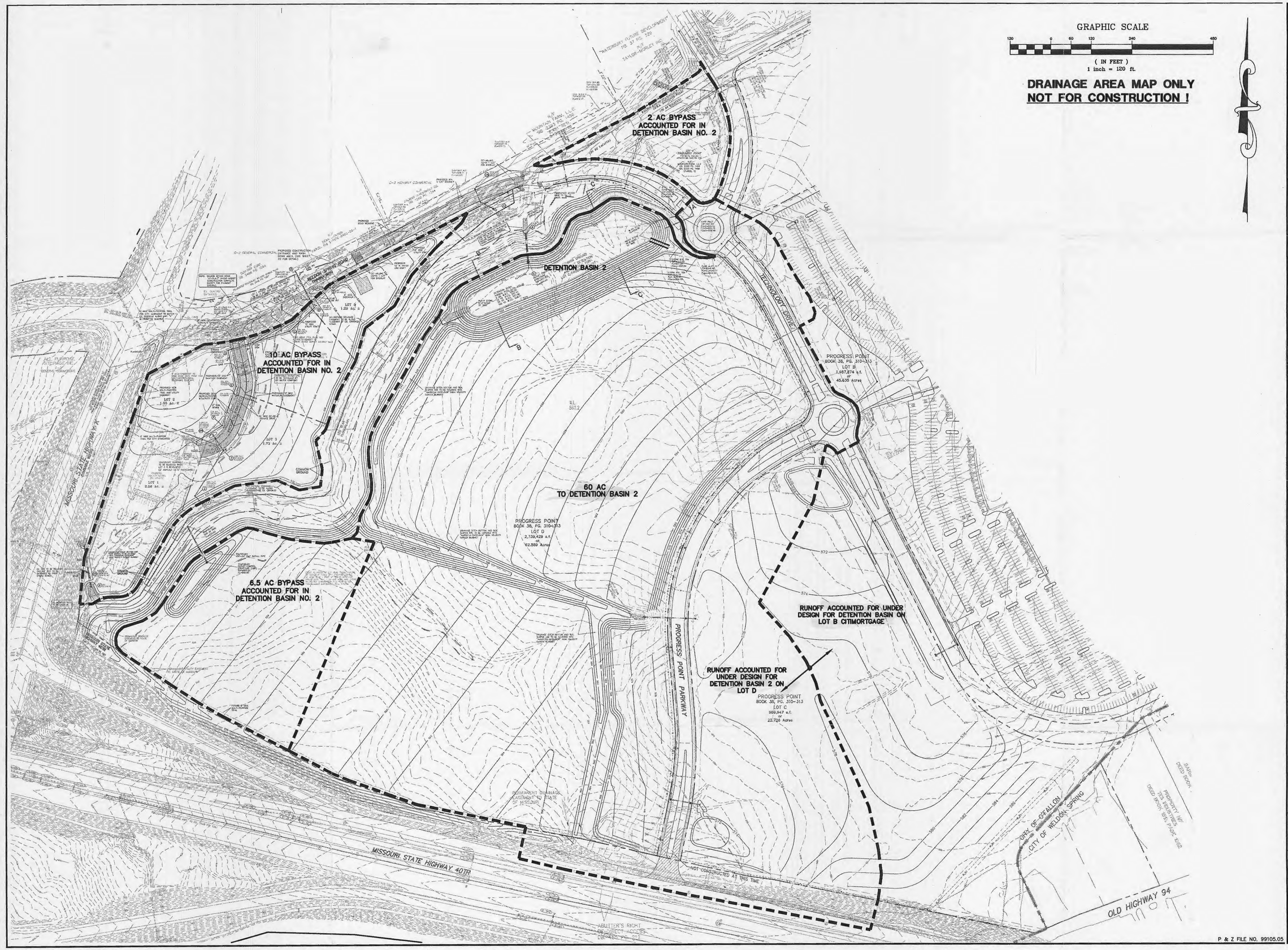

P & Z FILE NO. 99105.05

STATE OF MISSOURI
GEORGE MICHAEL STOCK
NUMBER E-25116
REGISTERED PROFESSIONAL ENGINEER
10/21/03

GEORGE M. STOCK E-25116
Civil Engineer

STOCK & ASSOCIATES CONSULTING ENGINEERS, INC
425 NORTH NEW BALLAS ROAD
SUITE 165
ST. LOUIS, MO. 63141
PH. (314) 432-8100
FAX (314) 432-8171
e-mail: general@stockassoc.com

Architect

Structural Engineer

Fire Protection Engineer

Plumbing Engineer

Mechanical Engineer

Electrical Engineer

CLAYCO
CLAYCO CONSTRUCTION COMPANY
2199 Innerbelt Business Center Dr.
St. Louis, MO 63114
Ph 314.429.5100 Fx 314.429.3165

TRISTAR BUSINESS COMMUNITIES
TRISTAR BUSINESS COMMUNITIES
13397 Lakefront Drive
St. Louis, MO. 63045
Ph 314.291.0814

Progress Point Village Improvement Plan and Lot D Sedimentation/Detention Basin Plan

O'Fallon, MO

DRAWING ISSUE / REVISION

Rev. No.	Description	Date
	ISSUED	06-27-03
1	REVISED PER CLIENT/ CITY COMMENTS	09-08-03
2	REVISED PER CITY AND DUCKETT CREEK	09-18-03
3	REVISED PER CITY AND DUCKETT CREEK	10-13-03
4	REVISED PER CITY	10-21-03

The Professional Engineer's seal affixed to this sheet indicates that the named Engineer has prepared or directed the preparation of the material shown only on this sheet. Other drawings and documents not exhibiting this seal shall not be considered prepared by or the responsibility of the undersigned.

Drawing Title

DEVELOPED DRAINAGE AREA MAP FOR DETENTION BASIN NO. 2

Drawing No.

C8.1

Scale	1"=100'		
Dwg By	DAB	Check By	GMS
Clayco Job No.	-	Consult. Job No.	200-2180.20

P:\DRAW-Y2K\DRAW2100\2002180-20\tristar-new\retail\plan-3-5-03\I-plans\C81-DRAINAGE.dwg Tue Oct 21 15:03:17 2003

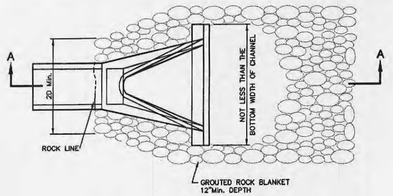

PLAN VIEW

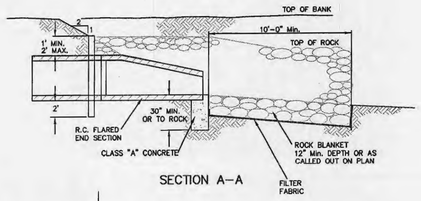

SECTION A-A

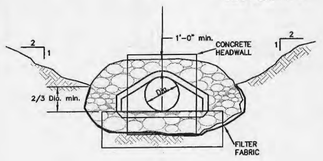

END VIEW

NOTES:
1. TO BE USED AT INTAKE AND DISCHARGE END OF PIPE. GRADE OF ROCK BLANKET TO BE ADJUSTED ACCORDINGLY.
2. GROUTED ROCK BLANKET REQUIRED.

FLARED END SECTION

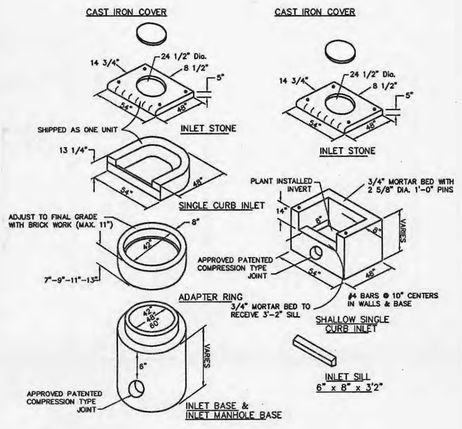

SINGLE STREET INLETS

NOTE: MSD SPECIFICATIONS SHALL APPLY FOR STORM SEWER INSTALLATION. 5/8" TRASH BAR SHALL BE INSTALLED FOR CURB INLET NUMBERS 2 AND 3.

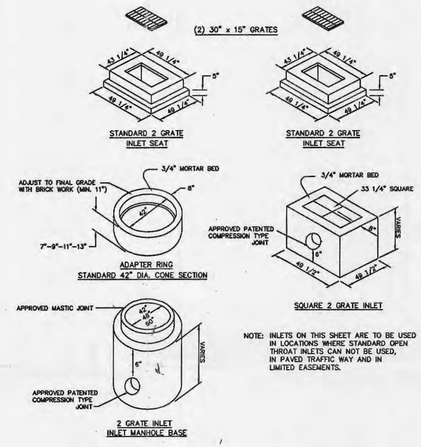

NOTE: INLETS ON THIS SHEET ARE TO BE USED IN LOCATIONS WHERE STANDARD OPEN THROAT INLETS CAN NOT BE USED, IN PAVED TRAFFIC WAY AND IN LIMITED EASEMENTS.

2 GRATE INLET

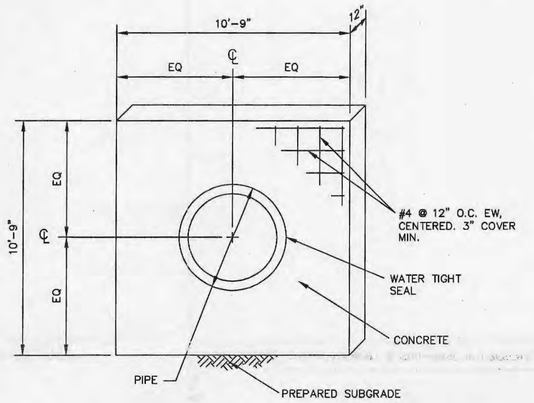

ANTI-SEEP COLLAR

(n.t.s.)

OUTLET WORKS STRUCTURE

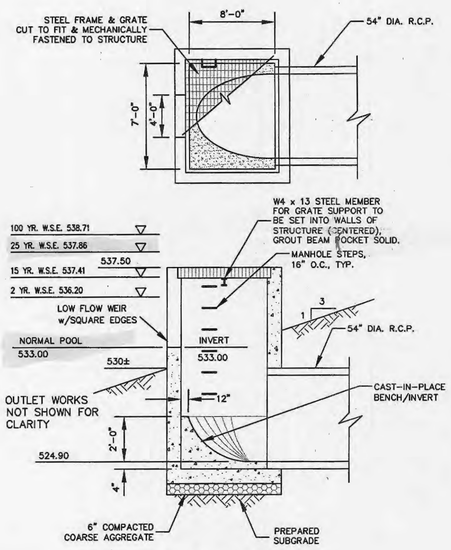

NOTE: OUTLET WORKS NOT SHOWN FOR CLARITY

OUTLET CONTROL STRUCTURE

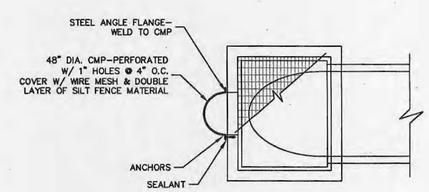

TEMPORARY DEWATERING DEVICE

RISER PIPE BASE CONDITIONS

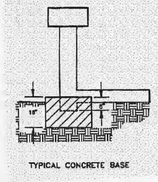

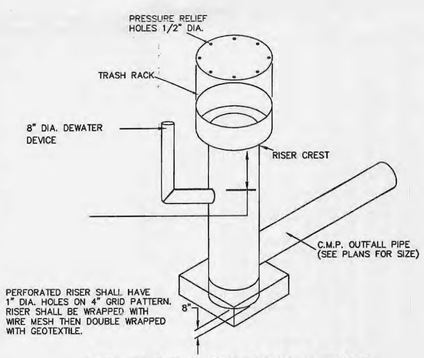

SCHEMATIC OUTFALL DETAIL

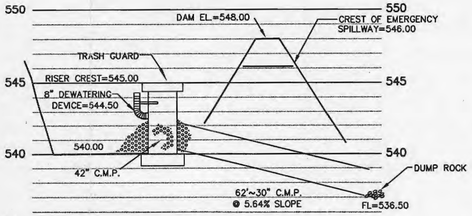

SEDIMENT TRAP "D" OUTFALL PROFILE

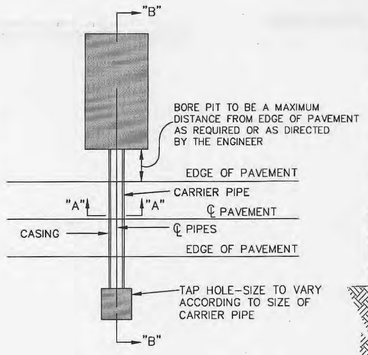

PLAN VIEW

GENERAL NOTES:

1. DO NOT SCALE DRAWING. FOLLOW DIMENSIONS.
2. INSTALLATION OF CASING AND CARRIER PIPE SHALL MEET THE REQUIREMENTS OF SEC. 726.6.4 OF THE ST. LOUIS CO. STANDARD SPECIFICATIONS FOR HIGHWAY CONSTRUCTION.
3. ALL JOINTS IN THE CASING PIPE SHALL BE WELDED.
4. THE PIPE TO BE PLACED IN THE BORE HOLE SHALL BE CAST IRON UNLESS OTHERWISE NOTED ON PLANS. IF NECESSARY OR REQUIRED, A SKID OR SHOE SHALL BE
5. PROVIDED FOR THE PIPE BELL TO PERMIT FLOW OF GROUT BENEATH THE PIPE, AND TO PREVENT SAGGING ALONG THE PIPE FLOWLINE.
6. GROUT SHALL CONSIST OF AN APPROVED MIX AND IT SHALL BE PLACED BY INSERTING THE GROUT PIPE TO ITS GREATEST DISTANCE TO INSURE FILLING ALL SPACES, AND THEN GRADUALLY WITHDRAWING THE GROUT PIPE AS FILLING PROCEEDS.
7. BORING WITHOUT CASING WILL BE PERMITED FOR SMALL SEWER LINES ONLY WHEN SUBSURFACE CONDITIONS ARE SUITABLE AND ONLY WITH PRIOR WRITTEN APPROVAL OF THE DIRECTOR.
8. STEEL CASING PIPE USED IN THE INSTALLATION OF SEWER LINE AND CONDUITS SHALL HAVE A MINIMUM YIELD STRENGTH OF 35,000 P.S.I.
9. REINFORCED CONC. CARRIER PIPE SHALL BE CLASS III.
10. V.C.P. SHALL BE STANDARD STRENGTH.
11. P.V.C. SHALL MEET A.S.T.M. D-3034 SPECIFICATIONS.
12. SEWERS BORED WITHOUT THE USE OF CASING SHALL BE CAST IN IRON AND MEET THE REQUIREMENTS OF A.S.T.M. A74-69.
13. GROUT SHALL MEET THE REQUIREMENTS OF SEC. 611.22 OF THE "ST. LOUIS COUNTY STANDARD SPECIFICATIONS FOR HIGHWAY CONSTRUCTION" AND SHALL HAVE A CONSISTENCY TO PERMIT THOROUGH FILLING OF VOIDS BETWEEN THE CARRIER PIPE AND THE CASING PIPE.
14. CASING PIPE USED IN THE INSTALLATION SHALL HAVE MINIMUM SHELL THICKNESS CORRESPONDING TO THE FOLLOWING REQUIREMENTS:

CASING PIPE INTERNAL DIA. (INCHES)	WALL THICKNESS (INCHES)
18,20,22	.250
24,26	.281
28,30,32,34	.312
36,38,40,48	.344

15. CARRIER PIPE REQUIRING A CASING PIPE WITH AN INTERNAL DIAMETER GREATER THAN INDICATED ABOVE SHALL BE APPROVED ON AN INDIVIDUAL BASIS BY THE DEPARTMENT

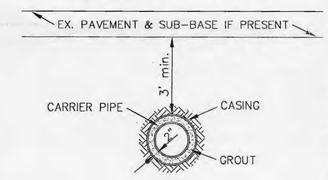

SECTION "A"-"A"

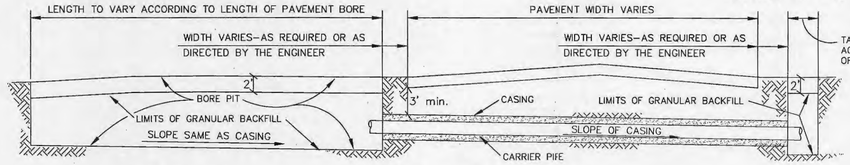

BORING DETAIL

SECTION "B"-"B"

P & Z FILE NO. 99105.05

STATE OF MISSOURI
GEORGE MICHAEL STOCK NUMBER E-25116
REGISTERED PROFESSIONAL ENGINEER
10/21/03

GEORGE M. STOCK E-25116
Civil Engineer

STOCK & ASSOCIATES CONSULTING ENGINEERS, INC
425 NORTH NEW BALLAS ROAD
SUITE 165
ST. LOUIS, MO. 63141
PH. (314) 432-8100
FAX (314) 432-8171
e-mail: general@stockassoc.com

Architect
Structural Engineer
Fire Protection Engineer
Plumbing Engineer
Mechanical Engineer
Electrical Engineer

CLAYCO CONSTRUCTION COMPANY
2199 Innerbelt Business Center Dr.
St. Louis, MO 63114
Ph 314.429.5100 Fx 314.429.3165

TRISTAR BUSINESS COMMUNITIES
13397 Lakefront Drive
St. Louis, MO. 63045
Ph 314.291.0814

Progress Point Village
Improvement Plan and Lot D
Sedimentation/Detention Basin Plan
OFallon, MO

DRAWING ISSUE / REVISION

Rev. No.	Description	Date
	ISSUED	06-27-03
1	REVISED PER CLIENT/ CITY COMMENTS	09-08-03
2	REVISED PER CITY AND DUCKETT CREEK	09-18-03
3	REVISED PER CITY AND DUCKETT CREEK	10-13-03
4	REVISED PER CITY	10-21-03

The Professional Engineer's seal affixed to this sheet indicates that the named Engineer has prepared or directed the preparation of the material shown only on this sheet. Other drawings and documents not exhibiting this seal shall not be considered prepared by or the responsibility of the undersigned.

Drawing Title
STORM DRAIN AND SEDIMENT CONTROL DETAILS

Drawing No.
C7.3

Scale			
Dwg By	DAB	Check By	GMS
Clayco Job No.	-	Consult. Job No.	200-2180.20

P:\DRAW-Y2K\DRAW2100\2002180-20\tristar-new\retail\plan-3-5-03\1-plans\C73-DETAILS.dwg Tue Oct 21 16:26:57 2003