CARRIAGE HILLS SUBD.
PHASE ONE – PAVEMENT
ELEVATION DETAILS

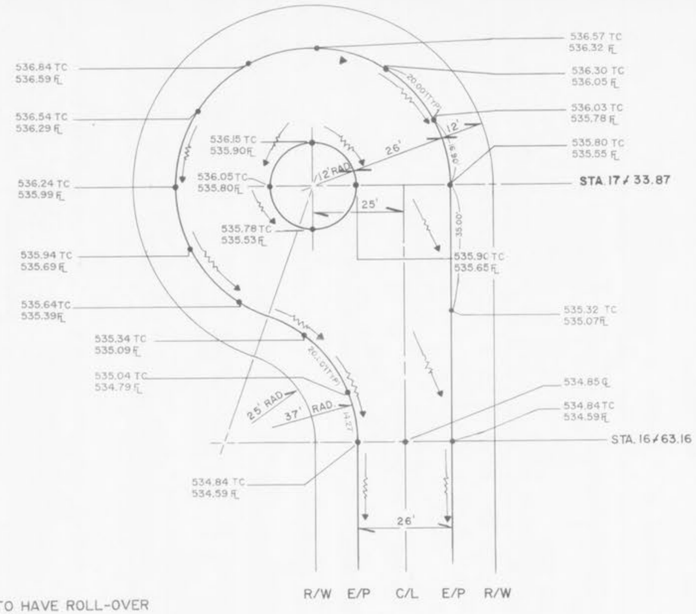

NOTE: ISLANDS TO HAVE ROLL-OVER TYPE CURBS.

BROUGHAM DRIVE
CUL – DE – SAC

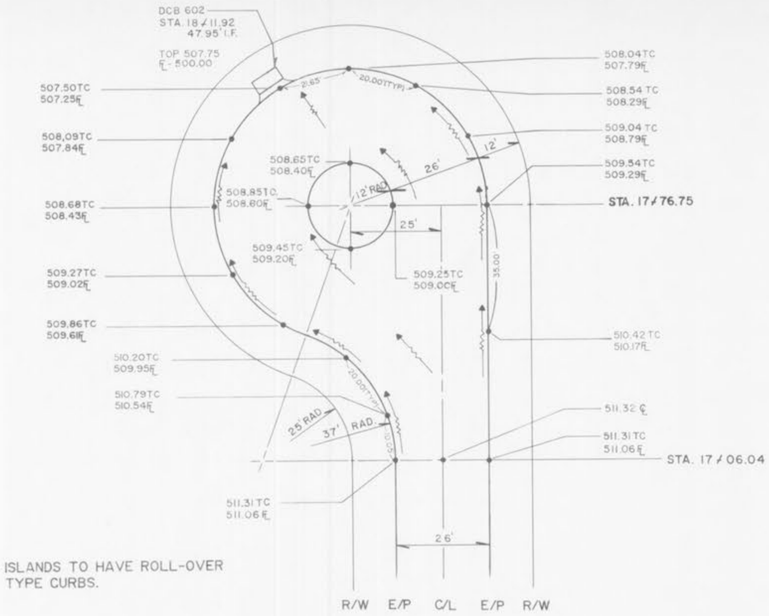

NOTE: ISLANDS TO HAVE ROLL-OVER TYPE CURBS.

CARRIAGE TRAIL COURT
CUL – DE – SAC

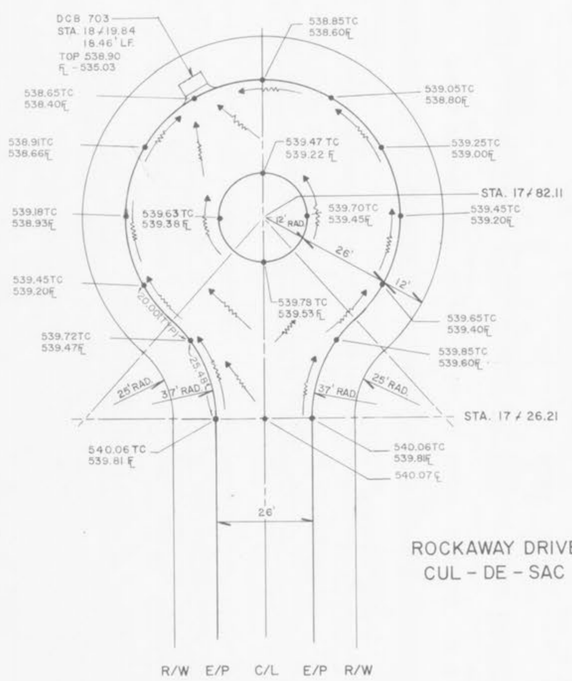

ROCKAWAY DRIVE
CUL – DE – SAC

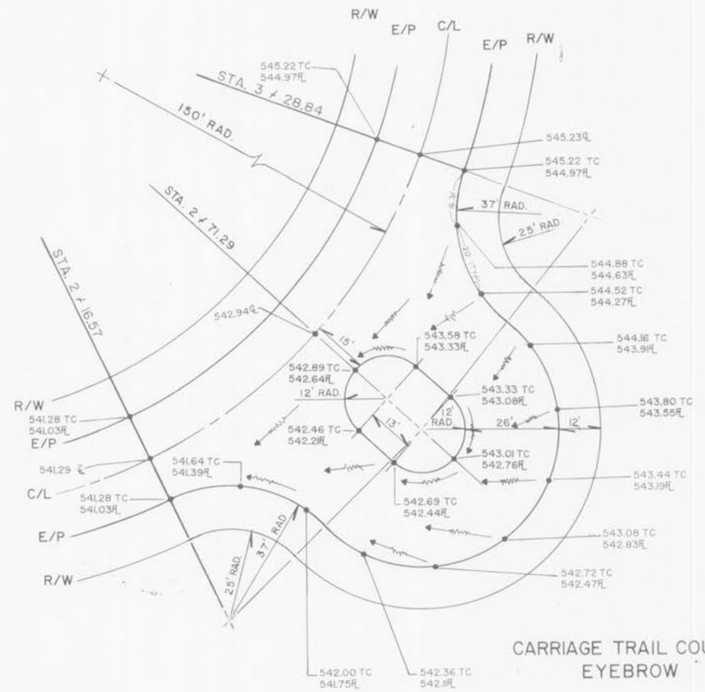

CARRIAGE TRAIL COURT
EYEBROW

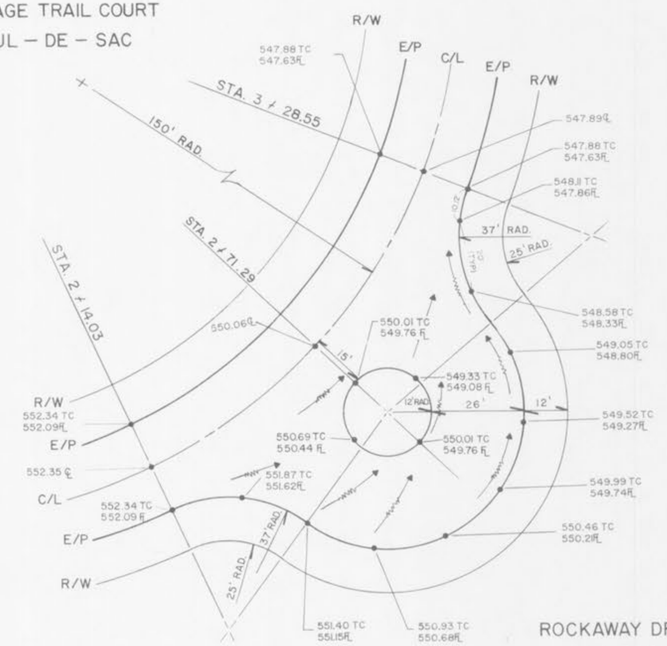

ROCKAWAY DRIVE
EYEBROW

NOTE: ISLANDS TO HAVE ROLL-OVER TYPE CURBS.

SCALE : 1" = 20'

10 0 10 20 30 40 50

REVISION DATE	DESCRIPTION

TERRA ASSOCIATES
1821 SHERMAN DRIVE
ST. CHARLES, MISSOURI 63303
PHONE: (314) 724-2277 or 946-2886

PROJECT DESCRIPTION

CLIENT
SPRING MEADOW PARTNERSHIP
1821 SHERMAN DRIVE – SUITE 2
ST. CHARLES, MO. 63303

JOB No. 120485
SCALE 1" = 20'
DATE 07/13/87
DRAWN BY MWM
SHEET NO. 8 / 24