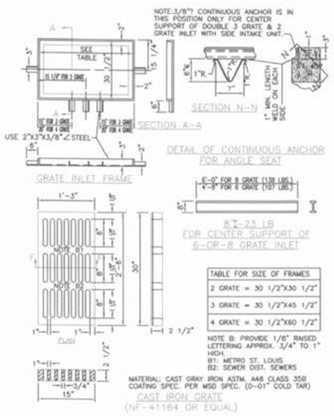

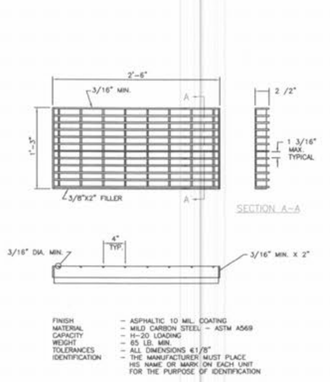

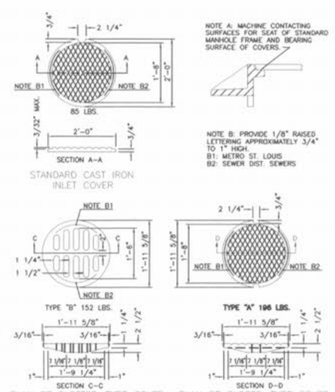

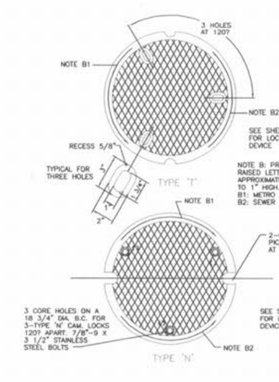

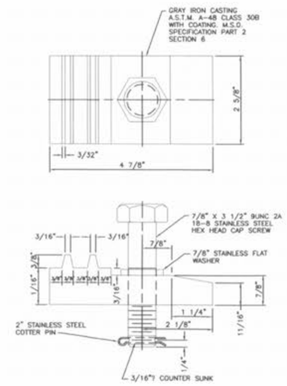

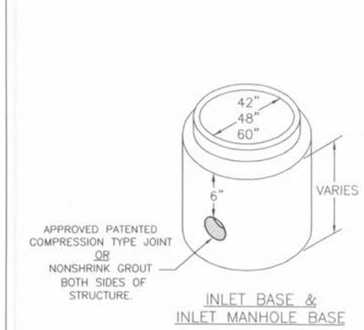

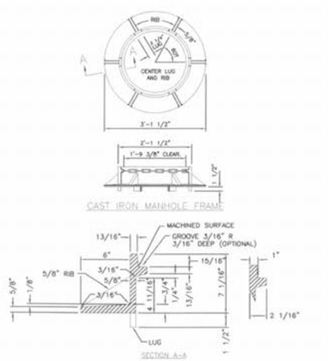

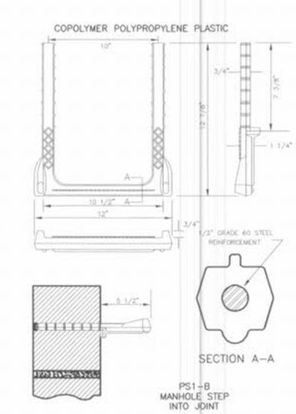

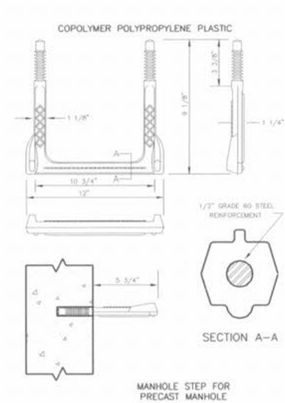

PRECAST CONCRETE STORMWATER STRUCTURES

MINIMUM DISTANCE FLOWLINE TO TOP OF STONE OR GRATE

PIPE I.D. NOMINAL INCHES	AREA INLET CIRCULAR BASE DIA. 42"	48"	60"	(2) GRATE INLET CIRCULAR BASE DIA. 42"	48"	60"	(2) GRATE INLET SQUARE (MAX.)	SINGLE STREET INLET CIRCULAR BASE DIA. 42"	48"	60"	SINGLE STREET INLET RECTANGLE (MAX.)
12"	45"			38"			31"	48"			41"
15"	48"			41"			34"	51"			44"
18"	52"			44"			37"	55"			48"
21"	55"			47"			40"	58"			51"
24"		58"			51"		44"		61"		54"
27"			78"			71"	NA			81"	NA
30"			82"			74"	NA			85"	NA
33"			85"			77"	NA			88"	NA
	(SEE SHEET 35 FOR DETAIL)			(SEE SHEET 36 FOR DETAIL)				(SEE SHEET 37 FOR DETAIL)			

NOTES:
1) 48" DIAMETER BASE REQUIRES 3" HIGH TRANSITION SECTION TO 42" DIAMETER, SIMILAR TO "ADAPTER RING" SHEET 35.
2) 60" DIAMETER BASE REQUIRES 24" HIGH CONCENTRIC REDUCER TRANSITION TO 42" DIAMETER, SIMILAR TO "ADAPTER RING" SHEET 35.
3) STANDARD DEPTH = 3'+ PIPE DIAMETER.

PRECAST CONCRETE STORMWATER STRUCTURES	METROPOLITAN ST. LOUIS SEWER DISTRICT *Standard Details of Sewer Construction*		
	Dr. J.L.G. Ch. J.C.K.	2000	SHEET 34

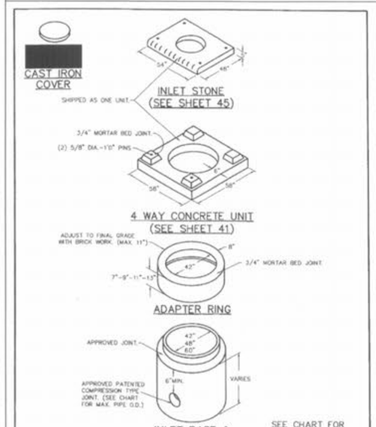

AREA INLET PRECAST CONCRETE	METROPOLITAN ST. LOUIS SEWER DISTRICT *Standard Details of Sewer Construction*		
	Dr. JLG/SAM Ch. J.C.K.	2000	SHEET 35

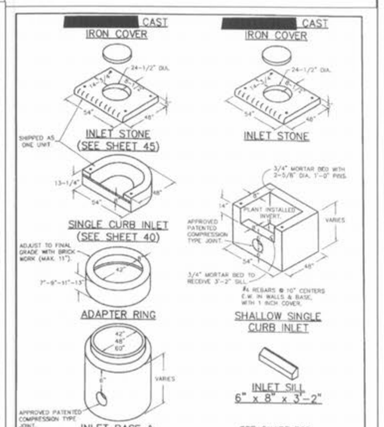

SINGLE STREET INLETS PRECAST CONCRETE	METROPOLITAN ST. LOUIS SEWER DISTRICT *Standard Details of Sewer Construction*		
	Dr. JLG/SAM Ch. J.C.K.	2000	SHEET 37

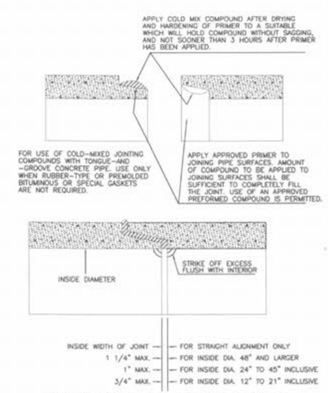

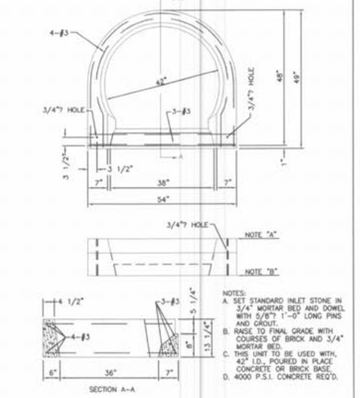

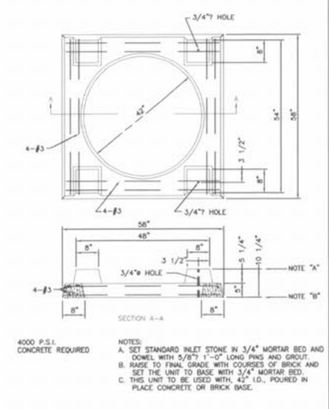

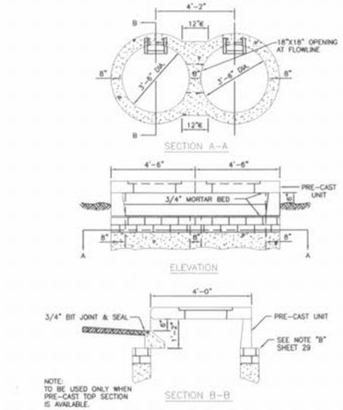

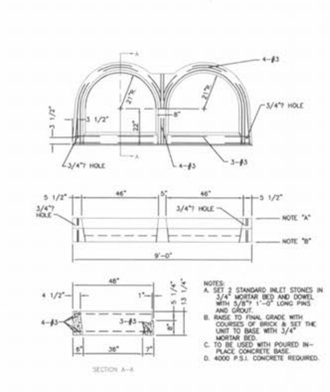

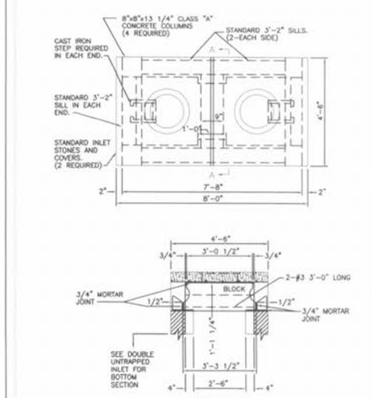

PICKETT RAY & SILVER
CIVIL ENGINEERS
PLANNERS
LAND SURVEYORS
333 Mid Rivers Mall Drive
St. Peters, MO 63376
Phone (636) 397-1211
Fax (636) 397-1104

WYNDGATE
CONSTRUCTION DETAILS

Prepared For:
SUMMIT POINTE L.C.
239 FOX HILL ROAD
ST. CHARLES, MO 63301
(636)940-0500

REVISIONS NO	DATE	
1	10/25/04	REVISED PER CITY
2	02/03/05	REVISED PER DCSD
3	02/18/05	REVISED PER CITY OF O'FALLON
4	01/10/06	ADD "ALTERNATE PIPE CONNECTION TO BASE DETAIL" PER CITY

ENGINEERS AUTHENTICATION
The responsibility for professional engineering liability on this project is hereby limited to the set of plans authenticated by the seal, signature, and date hereunder attached. Responsibility is disclaimed for all other engineering plans involved in this project and specifically excludes revisions after this date unless reauthenticated.
PICKETT, RAY & SILVER, INC
STATE OF MISSOURI — ELMER L. ANTHONY — NUMBER: E-16146 — REGISTERED PROFESSIONAL ENGINEER
1/12/06

DRAWN	DATE
J.E.E.	6-29-04
CHECKED	DATE
D.W.D.	6-29-04

PROJECT # 01267.SUP0.02R
TASK # 2 FIELD BOOK

WYNDGATE CONSTRUCTION DETAILS
SHEET 170 OF 174

© Copyright 2004 by Pickett, Ray & Silver Inc.